NASA
Technical
Paper
2515

March 1986

Integrated Composite Analyzer (ICAN)

Users and Programmers Manual

Pappu L. N. Murthy
and Christos C. Chamis

DTIC
ELECTE
NOV 20 1995
S D
B

DISTRIBUTION STATEMENT A
Approved for public release;
Distribution Unlimited

19951116 057

DTIC QUALITY INSPECTED 5

NASA

DEPARTMENT OF DEFENSE
PLASTICS TECHNICAL EVALUATION CENTER
ARRADCOM, DOVER, N. J. 07801

@str@
*MSG DI4 DROLS PROCESSING-LAST INPUT IGNORED

-- 1 OF 1
-- ***DTIC DOES NOT HAVE THIS ITEM***
-- 1 - AD NUMBER: D439867
-- 5 - CORPORATE AUTHOR: NATIONAL AERONAUTICS AND SPACE ADMINISTRATION
-- CLEVELAND OH LEWIS RESEARCH CENTER
-- 6 - UNCLASSIFIED TITLE: INTEGRATED COMPOSITE ANALYZER (ICAN) -
-- USERS AND PROGRAMMERS MANUAL.
--10 - PERSONAL AUTHORS: MURTHY,P. L. ;CHAMIS,C. C. ;
--11 - REPORT DATE: MAR , 1986
--12 - PAGINATION: 75P
--14 - REPORT NUMBER: E-2935
--16 - MONITOR ACRONYM: NASA
--19 - MONITOR SERIES: TP-2515
--20 - REPORT CLASSIFICATION: UNCLASSIFIED
--22 - LIMITATIONS (ALPHA): APPROVED FOR PUBLIC RELEASE; DISTRIBUTION
-- UNLIMITED. [redacted]
-- [redacted]
--33 - LIMITATION CODES: 1 [redacted]

-- END Y FOR NEXT ACCESSION END

Alt-Z FOR HELP3 ANSI 3 HDX 3 3 LOG CLOSED 3 PRINT OFF 3 PARITY

NASA Technical Paper 2515

1986

Integrated Composite Analyzer (ICAN)

Users and Programmers Manual

Pappu L. N. Murthy
and Christos C. Chamis

Lewis Research Center
Cleveland, Ohio

NASA
National Aeronautics
and Space Administration

Scientific and Technical Information Branch

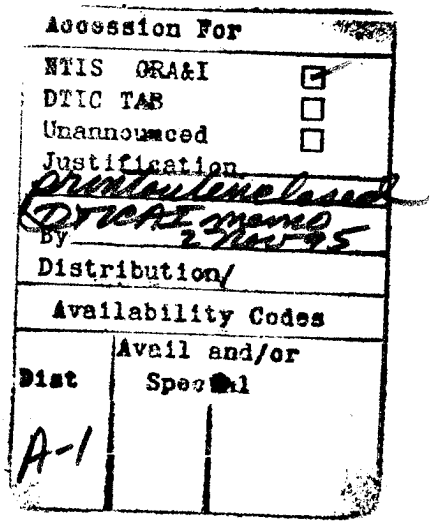

Contents

Summary 1
Introduction 1
Symbols 2
Users Manual 4
Obtain the Code 5
Make it Operational 6
Supply the Input Data 6
Detailed Description of Input Data 8
Title card 9
Starting data card 9
Booleans 9
Ply details card group 10
Material system details 10
Load cards 10
Output 11
A Typical IBM Terminal Session 15
Programmers Manual 16
Main Program 16
Subroutine Description 18
Subroutine INVA (N, A, C) 18
Subroutine GACD3 (C) 18
Subroutine BLOCK DATA 22
Subroutine GPCFD2 (RESF, DISP, PROPC) 22
Subroutine COMSA (M) 25
Subroutine EDGSTR 27
Subroutine STRCNF 29
Subroutine NUDIFS 29
Subroutine MSCBFL (AINF) 30
Subroutine MCRSTR 30
Subroutine MINCOF 35
Subroutines AMAXF, AMINF, LOGO, LOGO2 36
Subroutine INHYD 36
Subroutine FIBMT (C, F, M, VF, VM, VP, KV, IFLAG) 37
Subroutine HTM (C, F, M, VF, VM, VV, IFLAG) 43
Subroutine FLEXX (C) 43
Subroutine COMPP (IPFLAG, ISFLAG) 44
Subroutines BANKRD and IDGER 50
Data base FBMTDATA.BANK 51
Appendixes
A-List of Code Identifiers 53
B-Input/Output 55
C-Resident Data Bank (FBMTDATA.BANK) 72
References 73

Summary

This manual describes the use of and relevant equations programmed in a computer code designed to carry out a comprehensive linear analysis of multilayered fiber composites. The analysis contains the essential features required to effectively design structural components made from fiber composites. The program is an outgrowth of two in-house computer codes, MFCA (Multilayered Filamentary Composite Analysis) and INHYD (Intraply Hybrid Composite Design). The inputs to the code are constituent material properties, factors reflecting the fabrication process, and composite geometry. The code performs micromechanics, macromechanics, and laminate analysis, including the hygrothermal response of fiber composites. The code outputs are the various ply and composite properties, composite structural response, and composite stress analysis results with details on failure. The code is in Fortran IV and can be used efficiently as a package in complex structural analysis programs. The input-output format is described extensively through the use of a sample problem. The code manual consists of two parts. The mechanics for using the code are described in the first part, the pertinent equations programmed in the code are described in the second part.

Introduction

The importance of and need for a multilevel analysis used for designing structural components made of multilayered fiber composites are documented in reference 1. A multilevel analysis, which was efficient in predicting the structural response of multilayered fiber composites (with the constituent material properties, the fabrication process, and the composite geometry known), is also documented in reference 1.

The multilayered analysis presented in reference 1 consists of (1) micromechanical theories for the thermoelastic properties and the stress-level limit of the single ply as functions of constituent material properties and the particular fabrication process, (2) the combined stress-strength criterion for the single ply, and (3) multilayered composite structural response and analysis (macromechanical or laminate analyses), where the interply layer effects are taken into account. A computer code designed to carry out this multilevel analysis, supplemented as noted by references 2 to 10, has been developed at the Lewis Research Center. This code is identified as MFCA for Multilayered Filamentary Composite Analysis (ref. 11).

Intraply hybrid composites are a logical sequel to conventional and interply hybrid composites. Recently, theoretical and experimental investigations have been conducted on the mechanical behavior of intraply hybrids at the Lewis Research Center (refs. 12 to 14). The theoretical methods and equations described in these references, together with those for hygrothermal effects (ref. 15), have been integrated into a computer code for predicting hygral, thermal, and mechanical properties of intraply hybrid composites. This information can then be used in designing these composites. This code is identified as INHYD for Intraply Hybrid Composite Design (refs. 16 and 17).

The present computer code is a synergistic combination of the aforementioned computer programs MFCA and INHYD together with several significant enhancements. The code is referred to as ICAN for Integrated Composite Analyzer. It utilizes the micromechanical design of INHYD and the laminate analysis of MFCA to build a comprehensive analysis capability for structural composites. Additional features unique to ICAN are the following:

(1) Ply stress-strain influence coefficients
(2) Microstresses and microstress influence coefficients
(3) Stress concentration factors around a circular hole
(4) Calculation of probable delamination locations around a circular hole
(5) Poisson's ratio mismatch details near a straight free edge
(6) Free-edge stresses
(7) Material cards for finite-element analysis using NASTRAN or MARC
(8) Failure loads, summary based on the maximum stress criterion and laminate failure stresses, and summary based on first-ply failure and fiber breakage criteria
(9) Transverse shear stresses and normal stresses

In addition to the above, ICAN has its own data base of material properties for commonly used fibers and matrices. The user needs to specify only the coded names for the constituents. The program searches and selects the appropriate properties from its library. Furthermore, input data preparation has been simplified substantially by the introduction of a partial free-field format. The output formats have also been improved significantly to ease user interpretation of the results. These enhancements make ICAN significantly more user friendly than its predecessors. The computer code has been programmed in Fortran IV and has been tested in UNIVAC 1108, IBM 370, and CRAY 1 computers.

Since this report is to serve as a users manual, the code is divided into two parts, the users manual and the programmers manual. The Users Manual describes the mechanics of using the code with respect to program format, input and output, and sample input data sets. The descriptions are extensive enough sc that even designers and analysts with little or no programming experience can easily use the code.

The programmers manual gives the various subroutine descriptions and the equations programmed therein, with details on the input and output and the global storage locations. This, along with the listing of the source program, allows the user to make his own modifications to the code as they become appropriate for further enhancements.

The Fortran variables are defined in appendix A. Included is information such as which part of the program of each global variable is generated. Table I provides a summary of details for preparing data cards, and the input data given in table II provide for immediate testing of the code. Properties for a few commonly used fibers and matrix materials are listed in appendix B. Appendix C shows sample input and output data for a specific case.

Symbols

A_{cx}	composite axial stiffness
A_{cx}^R	reduced axial stiffness
BIDE	boolean, true if interply effects are included
C_{cx}	composite coupling stiffness
C_{e1}	string with force variables
C_{e2}	string with displacement variables
COMSAT	boolean, true if laminate analysis is wanted
CSANB	boolean, true if membrane and axial symmetry exists
D_c, D_ℓ	moisture diffusivity
D_{cx}	composite flexural rigidity
D_{cx}^R	reduced bending rigidity
$\mathbf{D}_v$	displacement vector
d_f	filament equivalent diameter
E_f, E_{cf}	filament elastic constants
E_{f11}, etc.	fiber normal modulus
$E_\ell, E_{c\ell}$	ply elastic constants

$E_{\ell 11}$, etc.	ply normal modulus
E_m,E_{cm}	matrix elastic constants
E_{m11}, etc.	matrix normal modulus
$\varepsilon_{m,etc}$	matrix failure strain allowables
F	combined stress-failure function
G_{f12}, etc.	fiber shear modulus
$G_{\ell 12}$, etc.	ply shear modulus
G_{m12}, etc.	matrix shear modulus
H_j	interply distortion energy coefficient
H_{kc}	array of constituent heat conductivities
h_c	composite heat capacity
i,j	index, generally ply or interply
$K_{c11,c22,c33}$	composite three-dimensional heat conductivities
$K_{cxx,cyy,cxy}$	composite two-dimensional heat conductivities
K_{f11}	fiber heat conductivity
$K_{\ell 11}$	ply heat conductivity
K_{m11}	matrix heat conductivity
k_v	apparent void volume ratio
k_f	actual fiber volume ratio
$k_{f\ell}$	ply apparent fiber volume ratio
k_m	actual matrix volume ratio
$k_{m\ell}$	ply apparent matrix volume ratio
$k_{v\ell}$	ply apparent void volume ratio
L_{sc}	array of limiting conditions
M_ℓ	ply moisture
M_{cx}	applied moment
$M_{cM_\ell x}$	hygral moment
$M_{cT_\ell x}$	thermal moment
m	load condition index
N_{cx}	applied membrane loads
$N_{cM_\ell x}$	hygral force
$N_{cT_\ell x}$	thermal force
N_f	number of fibers per end
N_ℓ	number of plies
$N_{\ell c}$	number of load conditions
NONUDF	boolean; true if detailed Poisson's ratio differences chart is to be suppressed
N_{pc}	string PROPC length
$N_{p\ell}$	string PROP length
P_c	composite properties array
P_{cp}	string PROPC
P_ℓ	ply properties array
$P_{\ell p}$	string PROP main program
$Q_{f,i,p,r,s}$	indices to print out string PROP
R	transformation matrix
RINDV	boolean; true if displacements are known

S_c	composite failure stress
$S_{\ell 11T}$, etc.	ply limit failure stresses
T_ℓ	ply temperature
t_ℓ	ply thickness
w_{cb}	composite local curvature changes
x,y,z	structural reference axes
α_c	composite coefficient of thermal expansion
α_f	fiber thermal coefficient of expansion
α_ℓ	ply thermal coefficient of expansion
α_m	matrix thermal coefficient of expansion
β_c	moisture expansion coefficients
β_e,β_ϵ	correlation factors for ply thermoelastic properties
β_h	correlation factor for ply heat conductivity
$\beta_\ell,\beta_f,\beta_m$	moisture expansion coefficients for ply, fiber, and matrix
β_s	correlation factor for ply strength
β_v	matrix strain magnification due to ply strain in the presence of voids
δ_f	interfiber spacing
δ_ℓ	interply layer thickness
δ_s	interfiber spacing
ϵ_{cs}	angle between composite material and structural axes
ϵ_{csx}	reference plane membrane strain
ϵ_ℓ	ply strain
$\theta_{\ell i},\theta_{\ell c}$	angle between ply material and composite axes
ν_{f12}, etc.	fiber Poisson's ratio
$\nu_{\ell 12}$, etc.	ply Poisson's ratio
ν_{m12}, etc.	matrix Poisson's ratio
$\rho_{f,m}$	fiber and matrix weight density
ρ_{mw}	density of matrix with moisture
$\sigma_\ell,\sigma_f,\sigma_m$	ply stresses, fiber stresses, and matrix stresses
1, 2, 3	material reference axes

Users Manual

The mechanics required to use this code for the analysis of multilayered fiber composites are described in this part of the report. The theory on which the code is based is described in the second part of the report (Programmers Manual).

The physical representations of the constituents used in the code are illustrated in figure 1. This figure shows a complete integration schematic starting with the constituent materials, fiber and matrix. The required input properties and computed properties at various levels are summarized in symbolic form as follows:

(1) Properties required by code as input for a fiber: $E_{f11,22,33}$; $\nu_{f12,23,13}$; $G_{f12,22,13}$; $\alpha_{f11,22,33}$; $K_{f11,22,33}$; H_{cf}; ρ_f; N_f; d_f; and S_{ft}.

(2) Properties required by code as input for a matrix: $E_{m11,22,33}$; $\nu_{m12,23,13}$; $G_{f12,23,13}$ $\alpha_{m11,22,33}$; $K_{m11,22,33}$; H_{cm}; ρ_m; S_{mc}; ε_{mpt}; ε_{mpc}; ε_{mps}; and ε_{mpTOR}.

(3) Properties required by code as input for a single ply: fiber and matrix properties and ply characteristics β_e, β_n, β_s, and T_ℓ.

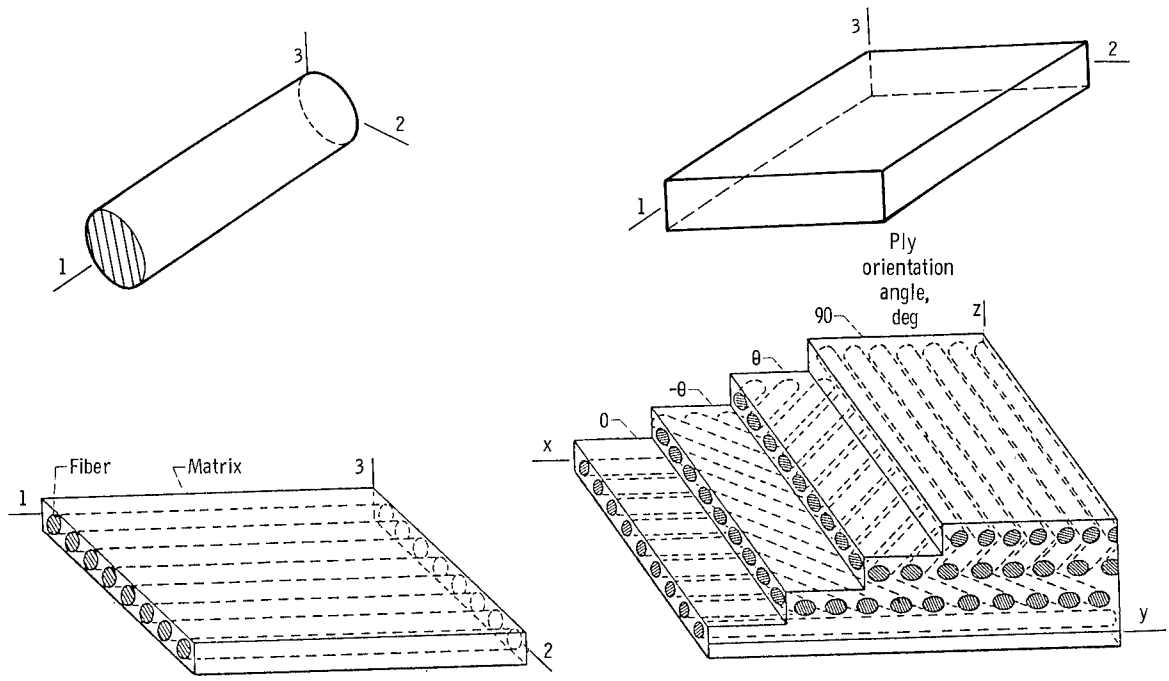

(a) Fiber.
(b) Matrix.
(c) Single ply.
(d) Composite.

Figure 1.—Schematic of typical multilayered fiber composite and some basic components.

(4) Properties computed by code for single ply: $E_{\ell 11,22,33}$; $\nu_{\ell 12,23,13}$; $G_{\ell 12,23,13}$; $\alpha_{\ell 11,22,33}$; $K_{\ell 11,22,33}$; $H_{c\ell}$; ρ_ℓ; t_ℓ; δ_ℓ; $S_{\ell 11T,11C,22T,22C,12S,23S}$; $K_{\ell 12}$; and stress analysis factors $\epsilon_{\ell 11,22,12}$; $\sigma_{\ell 11,22,12}$; and $1.0 - F(\sigma,S,K_{\ell 12})$.

(5) Properties required by code as input for a composite: ply properties and composite characteristics $\theta_{\ell i}$, H_j, $K'_{\ell 12\alpha\beta}$, N_{cx}, M_{cx} or U_{cx}, and W_{cx}.

(6) Output computed by code for a composite: $\{\epsilon_{cx}\} = [E_c]\{\sigma_c\} + T_\ell\{\alpha_c\}$; $[E_c]^{-1}$; $K_{cxx,yy,xy}$; H_c;

$$\begin{Bmatrix} N_{cx} \\ M_{cx} \end{Bmatrix} = \begin{bmatrix} A_{cx}C_{cx} \\ C_{cx}D_{cx} \end{bmatrix} \begin{Bmatrix} U_{cx} \\ W_{cx} \end{Bmatrix} + \begin{Bmatrix} N_{cxT_\ell} \\ M_{cxT_\ell} \end{Bmatrix}$$

and the inverse $\Delta\varphi_{\text{delj}}$.

Figure 2(a) shows the subroutines and sequence in the code. The subroutines between the Main program and the input data may be arranged in any desired order. The user should refer to figure 2(b) for the logic flow of the analysis.

The following four steps are required to use the code in the user's computer facility:

(1) Obtain the code
(2) Make it operational in the user's computer facility
(3) Supply the input data
(4) Interpret the code output results

Obtain the Code

The code may be obtained in cards. If this is not convenient or possible, the cards can be punched from the compiled listing (contact COSMIC, The University of Georgia, Athens, GA 30602, concerning the availability of this program).

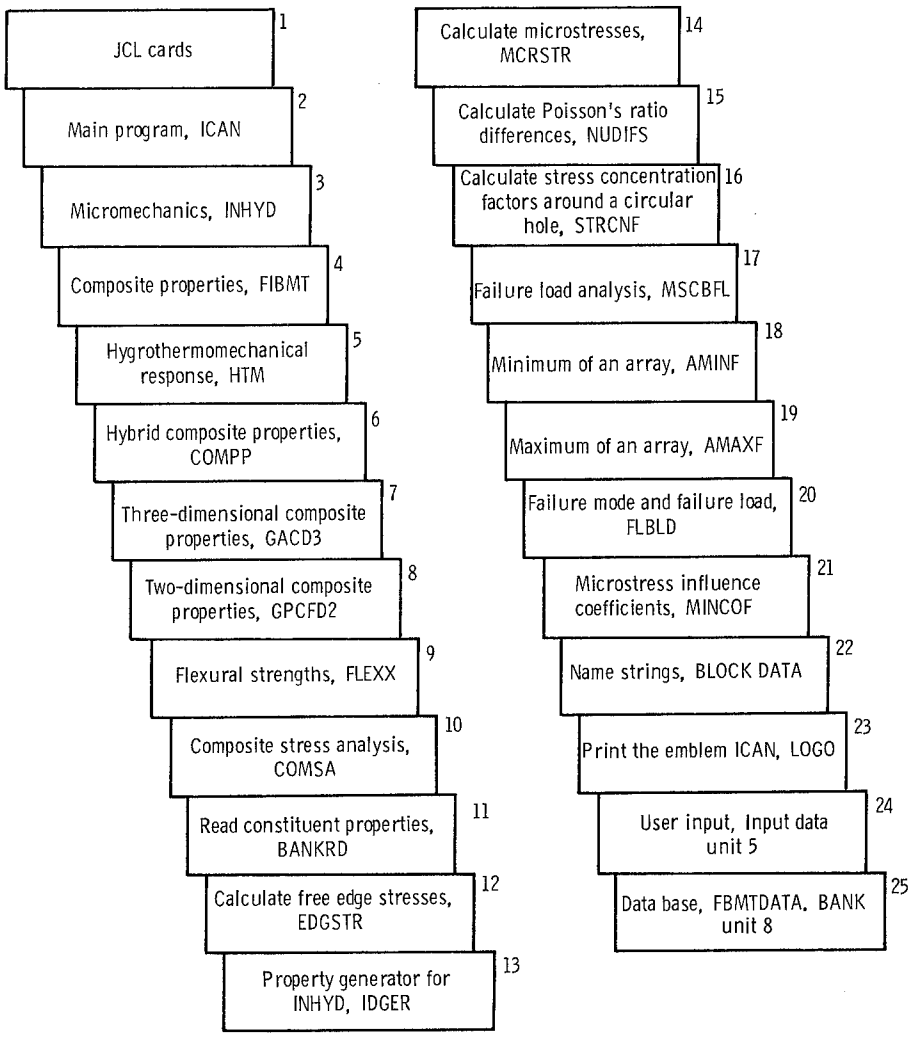

(a) Schematic showing subroutines and sequence of ICAN code.

Figure 2.—Subroutines, sequence, and logic flaw of ICAN code.

Make it Operational

A prerequisite to the program is the availability of a Fortran compiler in the user's computer facility. To run the program, certain computer-system-dependent control cards (Job Control Language (JCL) cards) may also be necessary. The computer system personnel should be consulted about these items.

Once the deck of cards has been assembled (except input data) with the proper control cards as shown in figure 2, the user is ready to compile the code in his facility. The compilation will indicate whether any additional modifications are needed. Most modifications will be minor and will usually deal with certain Fortran statements peculiar to each compiler.

Supply the Input Data

The physical arrangement of the input data cards is illustrated in figure 3. Details for preparing the input data cards are summarized in table I. A detailed description of these cards is given subsequently. A sample for preparing input data for a four-ply symmetric laminate is presented in table II. This laminate has two different material systems. The 0° plies are of AS graphite fiber/intermediate-modulus, low-strength epoxy matrix composite. The 90° plies are made of a hybrid composite. The primary composite is S glass/high-modulus, high-strength epoxy. The secondary composite is AS graphite/intermediate-modulus, high-strength epoxy.

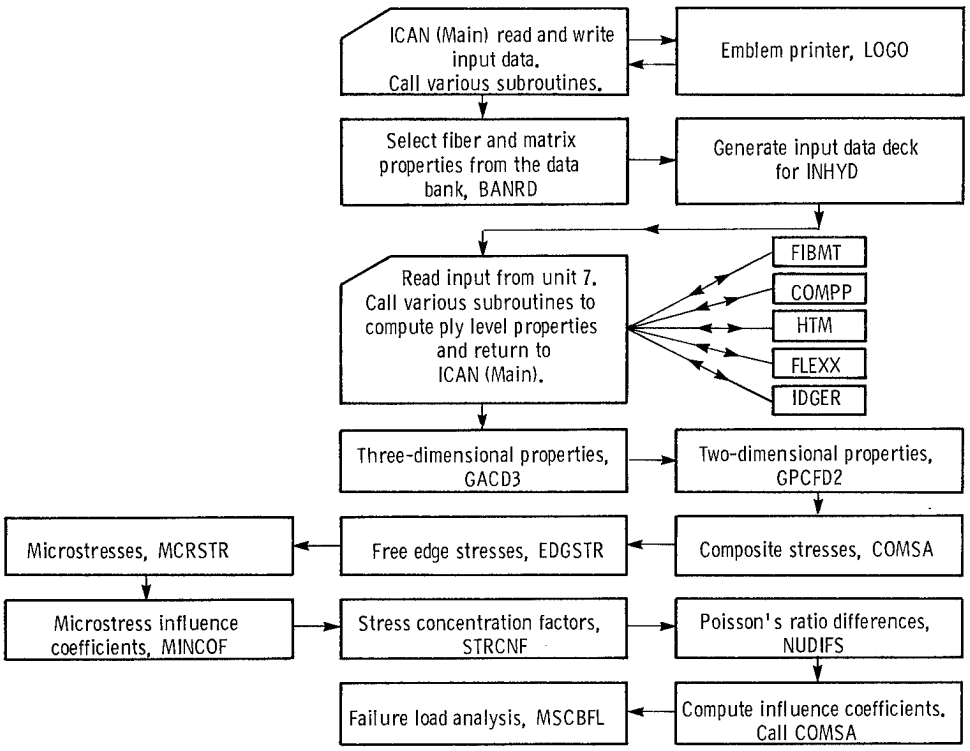

(b) Schematic showing logic flow of ICAN code.

Figure 2.—Concluded.

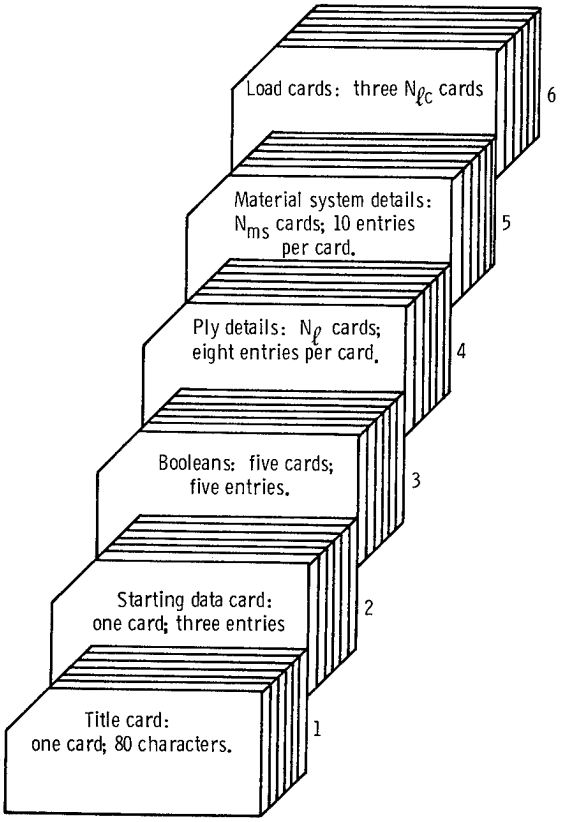

Figure 3.—Physical arrangement of input data cards.

TABLE I.—SUMMARY OF DETAILS FOR PREPARING INPUT DATA CARDS

Card group	Identification	Code symbol	Number of entries	List of entries, sequential order	Card field columns	Format	Comments and engineering units
1	Title card	TITLE	80	Alphabetic characters	1 to 80	(10a8)	
2	STDATA	NL,NLC,NMS	3	N_ℓ,$N_{\ell c}$,N_{ms}	9 to 36	(a8,3I8)	Composite geometrics
3	Boolean for input displacement	RINDV	1	--------	1 to 6	--------	T (true) if displays are inputs; otherwise F (false)
	Boolean for interply layer energy contribution	BIDE	1	--------	1 to 6	--------	T (true) if contributions are desired; otherwise F (false)
	Boolean for membrane and bending symmetry	CSANB	1	--------	1 to 6	(L6)	T (true) if symmetry exists; otherwise F (false)
	Boolean for laminate analysis	COMSAT	1	--------	1 to 6	--------	T (true) if laminate analysis is desired; otherwise F (false)
	Boolean for Poisson ratio chart	NONUDF	1	--------	1 to 6	--------	T (true) if Poisson ratio differences chart is not desired; otherwise F (false)
4	PLY (ply desired)	INP1,IP1,TU,TCU DELM,TETA,THCKNS	7	i,j,T_u, T_{cu},ΔM, θ_ℓ,t_ℓ	1 to 64	(a8,2I8,5F8.3)	Ply layup and temperature and moisture conditions
5	MATCRD (material system details)	CODES(1,1,J), CODES(1,2,J), VFP,VVP, CODES(2,1,J), CODES(2,2,J), VFS,VVS,VSC	9	Primary composite code names for fiber and matrix, k_f, k_v; Secondary composite code names for fiber and matrix, k_{sc}, k_f, k_v	1 to 64	(a8,2a4,2E8.2)	Description of material systems to be used
6	PLOAD (loading details)	NX,NY,NXY,THCS	4	N_x,N_y,N_{xy},	1 to 32	(a8,7E8.4)	Loading conditions (inplane)
		MX,MY,MXY	3	θ_{cs},M_x,M_y, M_{xy}	1 to 32	(a8,7E8.4)	Angle of inclination to the structural x-axis
		DMX,DMY	4	dM_x/d_x,	1 to 40	(a8,7E8.4)	Loading conditions (bending)
		PRSSU,PRSSL		dM_y/d_y, P_u,P_ℓ			Loading conditions (tranverse)

Input data for additional composite systems may be easily prepared. This is done by selecting the desired fiber and matrix from the available materials listed in appendix C using the variable FBMTDATA.BANK and modifying the appropriate entries in the input data sample illustration.

After the input data have been properly assembled (as shown in fig. 3), they are placed in their physical position (fig. 2) and the code is ready to be run.

Detailed Description of Input Data

The card group numbers referred to here are given in figure 3 and table I. The sequential order of the entries in each card group is given in table I. Note that most data cards are identified by a mnemonic to indicate the card group in which it belongs in the input data deck. Also, most data cards are divided into fields of eight, with one entry per field being allowed. The mnemonic is entered in

TABLE II.—ICAN SAMPLE INPUT DATASET

```
FOUR PLY SYMMETRIC LAMINATE.  ICAN SAMPLE INPUT DATA.

    STDATA        4        1        2

      T                                          COMSAT
      F                                          CSANB
      F                                          BIDE
      F                                          RINDV
      T                                          NONUDF
      PLY         1        1  70.00      70.0    0.0      0.0   0.010
      PLY         2        2  70.00      70.0     .0     90.0    .005
      PLY         3        2  70.00      70.0     .0     90.0    .005
      PLY         4        1  70.00      70.0     .0       .0    .010
MATCRDAS--IMLS   0.55         0.02    AS--IMLS   0.0    0.57     0.03
MATCRDSGLAHMHS    .55          .01    AS--IMHS    .4     .57      .01
 PLOAD 1000.     0.0          0.0        0.0             NX,NY,NXY,THCS
 PLOAD  0.0       .0           .0                         MX,MY,MXY
 PLOAD   .0       .0                                      DMX/QX,DMY/QY,PRSS
```

format A8, and the integers are entered in format I8. The real numbers may be entered anywhere in the appropriate field. The following is a brief description of each card group together with examples taken from table II:

Title card.

Any title of length up to 80 characters
FOUR PLY SYMMETRIC LAMINATE. ICAN SAMPLE INPUT DATA.

As shown, any title of length up to 80 characters including blanks may be supplied on this card.

Starting data card.

1	8,9	16,17	24,25 a_{32}
Mnemonic	N_ℓ	$N_{\ell c}$	N_{ms}
STDATA	4	1	2

This card has a mnemonic STDATA. It contains the overall laminate and loading details. These details are the number of plies N_ℓ, the number of loading conditions $N_{\ell c}$, and the number of different material systems N_{ms}.

Booleans.

1	6,7
Boolean T or F	This space may be used for comments
T	COMSAT
F	RINDV
F	BIDE
F	CSANB
T	NONUDF

A set of booleans, COMSAT, RINDV, BIDE, CSANB, and NONUDF is defined through these cards. These are five cards, one per each logical variable. The format is L6. The variables have the following functions:

(a) COMSAT.—The letter T in the card will direct the program to perform a complete laminate analysis. A letter F would terminate the program at this stage.

(b) RINDV.—The letter T is entered in the card if the displacements are inputs; otherwise, the letter F is entered.

(c) BIDE.—The letter T is entered in the card if the interply layer contributions on the composite are desired; otherwise, the letter F is entered.

(d) CSANB.—The letter T is entered in the card if the composite has both membrane and bending symmetry; otherwise, the letter F is entered.

(e) NONUDF.—The letter T is entered if the detailed Poisson's ratio difference chart is to be suppressed; otherwise, the letter F is entered.

Ply details card group.

1	8,9	16,17	24,25	32,33	40,41	48,49	56,57	64
Mnemonic	Ply	Material MID.	T_u	T_{cu}	M	θ_ℓ	t_ℓ	
PLY	1	1	70.00	70.0	.0	0.0	.015	
PLY	2	2	70.00	70.0	.0	90.0	.005	
PLY	3	2	70.00	70.0	.0	90.0	.005	
PLY	4	1	70.00	70.0	.0	0.0	.010	

All the cards in this group have the mnemonic PLY. The number of cards is N_ℓ, with eight entries on each card. The first entry is PLY. The second and third entries are identification numbers for the ply and the material system, respectively. The fourth and fifth entries are the use temperature T_u and the cure temperature T_{cu}, respectively. The sixth entry is the percentage of moisture M. The seventh and the eighth entries are the orientation angle θ of the ply and the thickness of the ply, respectively. A default value of 0.005 is taken for the thickness if this entry is missing. The material system identification number should be different not only for different composite systems but also for varying use temperature or moisture content from ply to ply.

Material system details.

1	8,9	16,17	24,25	32,33	40,41	48,49	56,57	64
Mnemonic	Fiber, matrix	k_f	k_v	Fiber, matrix	V_{sc}	k_f	k_v	
MATCRD	AS--IMLS	.55	.02	AS--IMLS	0.0	.57	.03	
MATCRD	SGLAHMHS	.55	.01	AS--IMHS	0.4	.57	.01	

All the cards in this group have the mnemonic MATCRD. The number of cards is N_{ms} with 10 entries in each card. The first entry is MATCRD. The second and the third entries are coded words for fiber and matrix material of the primary composite. The code words are entered in format 2A4. For example, the code for AS-type fiber is AS-- and epoxy matrix is EPOX. A dictionary of codes for several fibers and matrices is provided in appendix C. The user may choose any combination of fiber and matrix for a composite system. The fourth and the fifth entries pertain to the details of the primary composite system. They are the primary fiber volume ratio and the primary void volume ratio, respectively. The next two entries refer to the secondary composite system which is applicable for the case of the hybrid composite ply. They should be the same as the second and third entries for standard composite systems. The next entry is the secondary composite system volume ratio. This is zero for the standard composite systems. The last two entries are the fiber volume ratio and the void volume ratio for the secondary composite system. These values are entered when applicable.

Load cards.

1	8,9	16,17	24,25	32,33	40
Mnemonic	N_x	N_{xy}	N_{xy}	T_{hcs}	
PLOAD	1000.	0.0	0.0	0.0	
PLOAD	0.0	0.0	0.0		
PLOAD	0.0	0.0	0.0	0.0	

All the cards in this group start with the mnemonic PLOAD. There are three cards for each loading condition. Thus, the total number of cards is $3N_{\ell c}$. The first card under each loading condition contains entries N_x, N_y, and N_{xy} for the membrane loads and T_{hcs} for the orientation of the loads with respect to the structural axes. Similarly the second card contains the bending resultants M_x, M_y, and M_{xy}. The last card contains the transverse shear resultants DM_x and DM_y and the transverse pressures P_u and P_ℓ.

The user input data are read from I/O unit 5. Apart from this, ICAN uses two more units, 7 and 8, for its I/O operations. Unit 8 is used to store the material properties data base. Unit 7 is used as a scratch file by ICAN. These I/O units must be appropriately defined by using the operating system JCL.

Output

The following items are printed out by the program:

(1) ICAN logo
(2) ICAN coordinate systems
(3) ICAN input data echo
(4) Input data summary
(5) Fiber, matrix, and ply level properties of primary and secondary composites
(6) Composite three-dimensional strain-stress and stress-strain relations about the structural axes; MAT9 card for MSC/NASTRAN solid elements
(7) Composite properties generated in array PC
(8) Composite constitutive equations about the structural axes
(9) Reduced bending and axial stiffnesses
(10) Data for finite-element analysis
(11) Displacement-force relations for the current load condition
(12) Ply hygrothermomechanical properties/response
(13) Details of Poisson's ratio mismatch among the plies
(14) Free edge stresses
(15) Microstresses and microstress influence coefficients for each different composite material system
(16) Stress concentration factors around a circular hole
(17) Locations of probable delamination around circular holes
(18) Ply stress and strain influence coefficients
(19) Laminate failure load analysis based on the first-ply failure/maximum stress criteria
(20) Summary of the laminate failure stress analysis based on two alternatives, first-ply failure and fiber breakage

The printout of the input data summary (app. B item 4) shows details regarding composite geometry, constituent specifications, temperature and moisture conditions, and the loading conditions.

The next few pages of the output are generated by the INHYD program package. They show the fiber-matrix properties for the different composite systems and the ply level properties of the composites (app. B, item 5).

The output of the composite three-dimensional strain-stress temperature and moisture relations and composite stress-strain relations about the structural axes are printed under the following headings:

(a) 3-D COMPOSITE STRAIN STRESS TEMPERATURE MOISTURE RELATIONS-STRUCTURAL AXES

The matrices $[E_c]_s^{-1}$, $\{\alpha_c\}_s$, and $\{\beta_c\}_s$ in the equation

$$\{\epsilon_c\}_s = [E_c]_s^{-1}\{\sigma_c\}_s - \Delta T_\ell\{\alpha_c\}_s - M_\ell\{\beta_c\}_s$$

where $\Delta T_\ell = T_\ell - T_{cu}$

are printed by the subroutine GACD3.

(b) 3-D COMPOSITE STRESS STRAIN RELATIONS-STRUCTURAL AXES

The matrix $[E_c]_s$ in the equation

$$\{\sigma_c\}_s = [E_c]_s\{\epsilon_c\}_s$$

is printed out by the subroutine GACD3.

The subscripts in the preceding equations indicate that the relations are written about the structural axes. It is noted that these properties are only local to subroutine GACD3. They can be made global if needed. The properties needed to prepare the MAT9 card of MSC/NASTRAN are printed out next under the heading MAT9 CARD FOR MSC/NASTRAN SOLID ELEMENTS (app. B, item 6).

The output of the composite properties, generated in array PC, are printed under the following heading (app. B, item 7):

COMPOSITE PROPERTIES—VALID ONLY FOR CONSTANT TEMPERATURE THROUGH THICKNESS LINES 1 to 31: 3-D COMPOSITE PROPERTIES ABOUT MATERIAL AXES LINES 33 to 62: 2-D COMPOSITE PROPERTIES ABOUT STRUCTURAL AXES

Sixty-two entries are printed under this heading as shown in the following list:

Code name	Notation	Explanation
PC(1)	ρ_c	weight density
PC(2)	t_c	thickness
PC(3) to PC(11)	$[E_c]$	three-dimensional stress-strain relations about material axes
PC(12) to PC(14)	$\{\alpha_c\}$	three-dimensional coefficients of expansion about material axes
PC(15) to PC(18)	$\{K_c\},H_c$	three-dimensional heat conductivity and heat capacity along material axes
PC(19) to PC(30)	$E_{c11},G_{c12},\nu_{c12}$	three-dimensional constants about material axes
PC(31)	z_c	distance to reference plane from bottom of composite
PC(32)	----------	blank
PC(33) to PC(38)	$[E_c]^{-1}$	two-dimensional stress-strain relations about structural axes
PC(39) to PC(47)	$E_{c11},G_{c12},\nu_{c12}$	two-dimensional elastic constants along structural axes
PC(48) to PC(54)	α_c, K_c, H_c	two-dimensional coefficients of thermal expansion, heat conductivity, and heat capacity along structural axes
PC(55) to PC(58)	D_c	moisture diffusivities
PC(59) to PC(62)	β_c	moisture expansion coefficients

Array PC and its corresponding string and headings are controlled by the formats in subroutine GPCFD2. For nonuniform temperature/moisture, the bending equivalent and the membrane equivalent elastic constants may be obtained by utilizing the reduced bending rigidity matrix and the reduced stiffness matrix which are also regular output of ICAN.

The output for the composite constitutive equations are printed in the following manner (app. B, item 8):

FORCES FORCE DISPLACEMENT RELATIONS DISPL T-FORCES H-FORCES

$$\begin{Bmatrix} \{N_{cx}\} \\ \{M_{cx}\} \end{Bmatrix} = \begin{bmatrix} [A_{cx}][C_{cx}] \\ [C_{cx}][D_{cx}] \end{bmatrix} \begin{Bmatrix} \{E_{csx}\} \\ \{W_{cb}\} \end{Bmatrix} - \begin{Bmatrix} \{N_{CT_tX}\} \\ \{M_{CT_tX}\} \end{Bmatrix} - \begin{Bmatrix} \{N_{CM_tX}\} \\ \{M_{CM_tX}\} \end{Bmatrix}$$

The elements of matrices A_{cx}, C_{ex}, D_{cx}, N_{cT_tx}, N_{cM_tx}, M_{cT_tx}, and M_{cM_tx} are printed out by the subroutine GPCFD2.

The output for the reduced bending rigidities is printed under the heading (app. B, item 9): REDUCED BENDING RIGIDITIES. The elements of $[D^R_{cx}]$ are printed out as a matrix.

Similarly, the output for the reduced axial stiffness $[A^R_{cx}]$ is printed out under the heading REDUCED STIFFNESS MATRIX. The corresponding formats for the above two outputs are in subroutine GPCFD2 (app. B, item 10).

The next printout comes from the main program under the heading: SOME USEFUL DATA FOR F.E. ANALYSIS. This information is useful for preparing material data cards for finite element codes NASTRAN and MARC.

The inverse of the constitutive equations is printed out in the following manner (app. B, item 11):

DISP DISPLACEMENT FORCE RELATIONS FORCES

$$\begin{Bmatrix} \{\epsilon_{cax}\} \\ \{w_{cb}\} \end{Bmatrix} = \begin{bmatrix} [A_{cx}] & [C_{cx}] \\ [C_{cx}] & [D_{cx}] \end{bmatrix}^{-1} \begin{Bmatrix} \{N_{cx}\} + \{N_{cT_\ell X}\} + \{N_{cM_\ell X}\} \\ \{M_{cx}\} \quad \{M_{cT_\ell X}\} \quad \{M_{cM_\ell X}\} \end{Bmatrix}$$

The elements of this inverse are printed out in the subroutine COMSA.

The current values for the loads and corresponding set of ply properties generated in array PL are printed out next (app. B, item 12). The explanations of the 75 entries in the PL property array are given in the following list:

Code name	Notation	Explanation
PL(1,I)	k_v	ply void volume ratio
PL(2,I)	$k_{f\ell}$	ply apparent fiber volume ratio
PL(3,I)	k_f	ply actual fiber volume ratio
PL(4,I)	$k_{m\ell}$	ply apparent matrix volume ratio
PL(5,I)	k_m	ply actual matrix volume ratio
PL(6,I)	ρ_ℓ	ply weight density
PL(7,I)	t_ℓ	ply layer thickness
PL(8,I)	δ_ℓ	ply and interply layer thickness
PL(9,I)	H_j	interply layer distortion energy coefficient
PL(10,I)	z_ℓ	distance from bottom of composite to ply centroid
PL(11,I)	z_{cg}	distance from reference plane to ply centroid
PL(12,I)	θ_{cs}	angle from structural axes to composite material axes (same for all plies) (fig. 2)
PL(13,I)	θ_ℓ	angle from ply material axes to composite material axes (fig. 2)
PL(14,I)	$\theta_{\ell s}$	angle from ply material axes to composite structural axes (fig. 2)
PL(15,I) to PL(23,I)	$[E_\ell]^{-1}$	ply stress-strain relations
PL(24,I) to PL(26,I)	$\{\alpha_\ell\}$	ply thermal coefficients of expansion
PL(27,I) to PL(29,I)	$\{K_\ell\}$	ply heat conductivities
PL(30,I)	$H_{c\ell}$	ply heat capacity
PL(34,I) to PL(42,I)	$E_{\ell 11}, \nu_{\ell 12}, G_{\ell 12}$	ply elastic constants
PL(43,I) to PL(48,I)	D_ℓ and β_ℓ	moisture diffusivities and expansion coefficients
PL(49,I)	$\rho_{\mu\text{del}}$	interply delamination factor
PL(50,I)	T_ℓ	ply temperature
PL(51,I) to PL(60,I)	$S_{\ell 11T}$, etc.	ply limiting stresses
PL(61,I)	$K_{\ell 12\alpha\beta}$	coefficient in combined stress-strength criterion
PL(62,I)	----------	combined stress-strength criterion
PL(63,I)	----------	interply delamination criterion
PL(64,I) to PL(69,I)	$\{\epsilon_\ell\}, \{\sigma_\ell\}$	ply applied strains and stresses
PL(70,I)	$\Delta\rho_j$	adjacent ply relative rotation
PL(71,I)	----------	Hoffman's failure criterion
PL(72,I)	M_ℓ	ply moisture
PL(73,I)	$\sigma_{\ell 13}$	transverse shear stress
PL(74,I)	$\sigma_{\ell 23}$	transverse shear stress
PL(75,I)	$\sigma_{\ell 33}$	thickness stretch stress

The next printout shows Poisson's ratio differences between the plies and the composite (app. B, item 13). They are printed out by the subroutine FESTRE under the heading DETAILS OF POISSON'S RATIO MISMATCH.

The stress peaks near the free edge region are printed out next by the subroutine EDGSTR under the heading (app. C, item 14) FREE EDGE STRESSES.

Item 14 of appendix B shows ply stresses in the structural coordinate system and the through-the-thickness stresses σ_{zz}, σ_{xz}, and σ_{yz}. The boundary layer decay length is also shown in the table under the heading YDCAY LENGTH. Care must be exercised in interpreting the results. They are based on approximate engineering theories and give good qualitative information regarding the relative magnitudes of the peaks in the individual plies. This printout is suppressed in the case of combined loading.

The microstresses in each ply are printed out next by the subroutine MCRSTR (app. B, item 15(a)). Two regions of interest are considered for the computations, the region between the fibers composed entirely of matrix (A) and the region consisting of fibers as well as matrix (B). The stresses are given a descriptive notation. Thus, SM2AL means stress in matrix along the transverse (2) direction in region A due to a ply stress along the longitudinal direction of the material. Figure 4 shows the definitions for regions A and B. The printout also shows microstresses resulting from moisture and temperature differences if nontrivial M_ℓ and T_ℓ are present.

The microstress influence coefficients, stresses due to unit applied stresses in direction 11, 22, 12, 13, and 23 (app. B, item 15(b)); unit temperature difference T_ℓ; and unit moisture content M_ℓ are output from the subroutine MINCOF. These variables are printed out following the microstresses.

Under the heading STRESS CONCENTRATION FACTORS (app. B, item 16) are printed out the factors K_{1xx}, K_{1yy}, and K_{1xy} which are due to inplane loading around a circular hole at 5° intervals by the subroutine STRCNF. Cumulative stress concentration due to combined loading may be estimated by simple addition of the respective stress concentration factors.

The next output (app. B, item 17) is under the heading POISSON RATIO DIFFERENCES and results from the subroutine NUDIFS. For each ply, the Poisson's ratio differences, $(\nu_\ell^i - \nu_c^{i-1})$ and $(\nu_\ell^i - \nu_c)$, and the products $K_{1xx}(\nu_\ell^i - \nu_c)$, $K_{1yy}(\nu_\ell^i - \nu_c)$, and $K_{1xy}(\nu_\ell^i - \nu_c)$ are printed out at θ intervals of 5° around a circular hole. This is suppressed if the boolean NONUDF is set to TRUE. This item shows the locations of probable delamination for each ply. These are the locations where products such as $K_{1xx}(\nu_\ell^i - \nu_i)$, for example, are maximum.

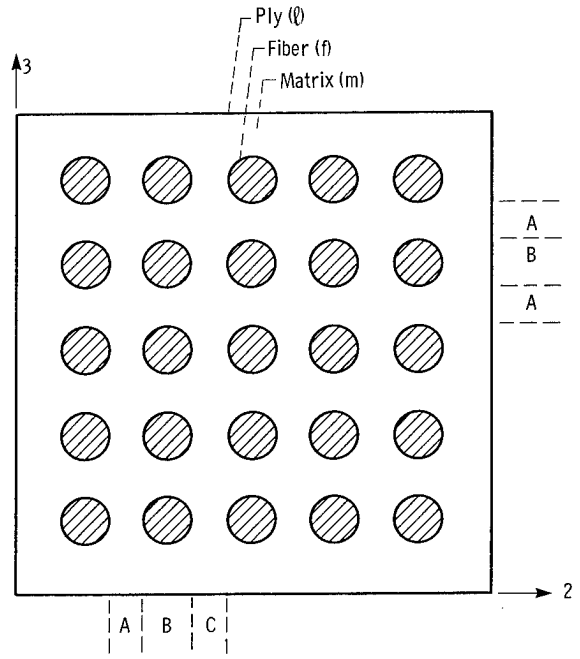

Figure 4.—Definitions of regions for ply microstress calculations.

The next item in appendix B shows the ply stress and strain influence coefficient arrays and ply stress influence coefficient arrays (app. B, item 18). These are computed in the subroutine COMSA and are printed by the main program ICAN. The first table gives the influence coefficients based on unit loads or moments/inch. The second table gives the influence coefficients in terms of unit applied stresses. Explanations of usage of these tables are provided at the end of each table.

The output from the subroutine MSCBFL is printed out next under the heading LAMINATE FAILURE STRESS ANALYSIS (app. B, item 19). The analysis is based on first-ply failure criteria. Results are printed in a tabular form for each ply, and a summary of the analysis is shown in the end (app. B, item 20). The summary shows the critical ply, the failure mode, and the load for each of the applied load types, σ_{cxxT}, σ_{cxxC}, σ_{cyyT}, σ_{cyyC}, and σ_{cxyS},, respectively. The first table shows results based on first-ply failure, and the second table shows results based on fiber failure by breakage.

A Typical IBM Terminal Session

To run ICAN, the user must first install and compile the program on his/her computer according to the system to be used. The procedure used on the Lewis Research Center IBM 370 is described in detail here starting from log on. The computer prompt signals are identified with uppercase letters. User entries are in lowercase letters. The following are prerequisites for the user to be able to run ICAN:

(1) A knowledge of how to compile and store the object module in the public storage space.

(2) A knowledge of redit or tedit processors so as to be able to create vs datasets of the input data deck. The details of the input data format have already been described in earlier paragraphs.

(3) A knowledge of commands like rmds, mds, ddef, libdef, print, and erase. These are a few of the commands commonly used in running a program on the IBM 370.

The user is advised to migrate the object deck, the input dataset, and the material property data base so as to conserve his/her permanent storage. The object deck, which is a binary version of the compiled source program, is referred to here as OBJ.ICAN. The data base of material properties is referred to as FBMTDATA.BANK.

The session is started by logging on at the terminal. This is achieved by typing logon, userid, and password. The system replies

```
TSS/370 RELEASE 3.0 PRPZ3 FTF18
   SOME MESSAGE          TASKID = OBD7 POOLID = LRCFM -
   LOGON AT 11:30 ON 01/15/84
```

The user is now ready for the session. The first phase of the session consists of restoring the necessary data sets to temporary storage. This is achieved by the following commands:

```
rmds obj. ican, aaa
SUCCESSFUL (TEMP) RESTORE OBJ.ICAN AS (AAA)
rmds fbmtdata.bank, ccc
SUCCESSFUL (TEMP) RESTORE FBMTDATA.BANK AS (CCC)
rmds ican.sample.input, bbb
SUCCESSFUL (TEMP) RESTORE ICAN.SAMPLE.INPUT AS (BBB)
```

At this point, the user has all the necessary data sets to run ICAN in his/her temporary storage.

The input/output fortran units that are utilized by ICAN for its various input/output operations need to be defined next. This forms the second phase of the session and is achieved by

```
ddef ft05f001, vs, bbb
ddef ft06f001, vs, icanout.bbb, ret = t
ddef ft08f001, vs, ccc, ret = t
ddef ft07f001, vs, T7, ret = t
```

During these operations, the system usually responds by the minimum prompt, the underscore (_).

The third phase consists of loading and executing the object deck and printing out the results. This is done by the following commands:

```
libdef lds, aaa
load gpcom$$$
ican
TERMINATED: STOP
print icanout,bbb, prtsp = edit
PRINT BSN = 8835, 1200 LINES
```

The last phase involves cleaning up the user's storage place and is achieved by issuing the commands

```
release lds
release ft
erase aaa
erase bbb
erase ccc
erase t7
```

The user may either logoff or proceed to execute another run for a different set of input data after the preceding set of commands.

Programmers Manual

A brief description of the main program (or control program) and theoretical equations programmed in the code are presented in this portion of the report. The subroutine descriptions follow the order of execution as shown in the flowchart (fig. 2(b)) rather than the physical sequential order (fig. 2(a)). It is assumed in the following discussion that the user has a working knowledge of computer programming and that he/she is familiar with the terminology appropriate to multilayered composite mechanics.

The assumptions and details leading to the derivation of the equations programmed in the code are not included here. However, they are described in the references cited. It is suggested that the interested user have these references available to him/her.

The information provided in this portion of the code together with the source program listing enables the user to modify, implement, and extend the code according to need.

Main Program

The main program contains the global variables, the various subroutines, the input data and format, the various program control statements, and the output. These are discussed subsequently. The flowchart of the program is shown in figure 5.

The global variables are given in the following list:

boolean	CSANB, BIDE, RINDV, COMSAT, NONUDF
integers	N_ℓ, $N_{p\ell}$, N_{pc}, N_f, $N_{\ell c}$, M, Q_i, Q_s, Q_p, Q_r, Q_f
real	θ_{cs}, ρ_f, ρ_m, d_f, E, ν, G, f, m, π
real arrays	$K_{\nu\ell}$, $K_{f\ell}$, $\theta_{\ell c}$, $t_\ell(1,1000)$, $P_\ell(75,1000)$, $P_c(1,62)$
maximum dimensions	$E_{c\ell}$, E_{cf}, E_{cm}, A_{cx}, C_{cx}, D_{cx}, D^R_{cx}, $A^R_{cx}(3,3)$, α_f, α_m, α_e, $N_{cT_\ell X}$, $M_{dT_\ell X}$, $N_{cM_\ell X}$, $M_{cM_\ell X}$, ϵ_{csz}, $\epsilon_{cbx}(1,3)$, $L_{sc}(1,6)$, M_{cx},N_{cx} $(3,N_{\ell c})$, $D_v(10,6)$, AINF (6,1000,8), $(\lambda_y)_{P,S}$, $(\lambda_x)_{P,S}$, $(\ell_x)_{P,S}$, $(\ell_y)_{P,S}$, (1,1000)

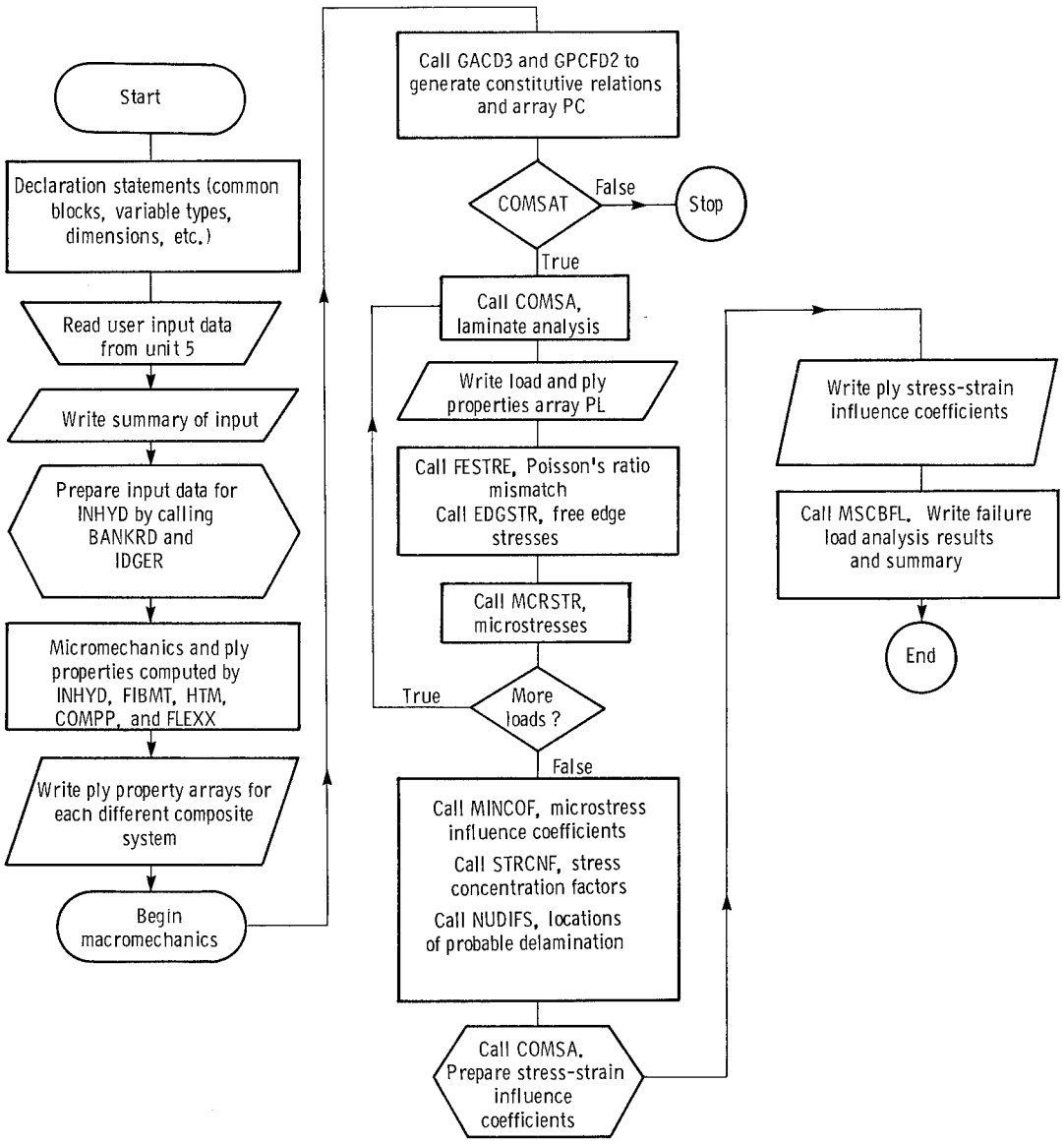

Figure 5.—ICAN program flowchart.

string arrays	title (80 characters) read in. P_ℓ (eight spaces per field, $N_{p\ell}$ fields) C_{e1} (six spaces per field, six fields) C_{e2} (six spaces per field, six fields) P_{cp} (six spaces per field, N_{pc} fields) codes C
current dimensions	N_ℓ, $N_{p\ell}$, N_{pc}, N_f, N_{ms}
real arrays	$K_{v\ell}$, $K_{f\ell}$, $\theta_{\ell c}$, $t_\ell(1,N_\ell)$, $P_\ell(75,N_\ell)$
current dimensions	$P_c(1,N_{pc})$, AINF $(6,N_\ell,8)$, $\lambda_{y,x,P,S}(1,N_\ell)$, $\ell_{x,y,P,S,}(1,N_\ell)$

The subroutines are as follows:

INVA	inverse of an array
GACD3	generates composite three-dimensional elastic and thermal properties and the two-dimensional thermal properties

BLOCK DATA	DISP (String) and RESF (String)
GPCFD2	generates composite two-dimensional elastic constants and constitutive equations
COMSA	generates the ply strain and stress states due to applied loads, checks for ply failure and interply delamination, and generates the ply stress and strain influence coefficients
INHYB	generates ply level properties with the aid of subroutines FIBMT, HTM, COMPP, and FLEXX
BANKRD/IDGER	generates constituent properties by using the data base FBMTDATA.BANK and arranges them in a proper format so as to input to INHYD
FESTRE	computes Poisson's ratio mismatch between the plies and the composite
EDGSTR	computes interlaminar free edge stresses
MCRSTR/MINCOF	generates the microstresses and the corresponding influence coefficients
STRCNF	generates the stress concentration factors around a circular hole
NUDIFS	generates the Poisson's ratio differences within the plies and the probable locations of delamination around the free edge of a circular hole
MSCBFL	performs failure load analysis based on first ply failure/maximum-stress criteria and prints the summary
AMINF	minimum value of an array
AMAXF	maximum value of an array
FLRLD	determines the failure load, failure mode, and the ply location

These subroutines are described in detail in the next section.

INPUT	title, N_ℓ, $N_{\ell c}$, N_{ms}, CSANB, BIDE, RINDV, COMSAT, NONUDF, t_ℓ, θ_ℓ, T_ℓ, M_ℓ, fiber name, matrix name, $k_{v\ell}$, $k_{f\ell}$, k_{sc}, N_{cx}, M_{cx}, DM_{cx}, P_u, P_ℓ

(For substitution and definition, see appendix A.)

Subroutine Description

Subroutine INVA (N,A,C).—This subroutine computes the inverse of a square matrix A by Gauss elimination and stores it in array C. The check

$$|A| \neq 0$$

is made and, if satisfied, the program continues; otherwise, the message SINGULAR MATRIX is displayed. The subroutine inputs are N, the matrix order, and the matrix A. The output is

$$A^{-1} \rightarrow C$$

Subroutine GACD3(C).—This subroutine generates the three-dimensional hygrothermoelastic properties of the composite about its structural (x,y,z) and material (1,2,3) axes. The angle θ is measured from x of the structural axes system. (See fig. 6.) In figure 6, replace xy etc. by 11 etc. and

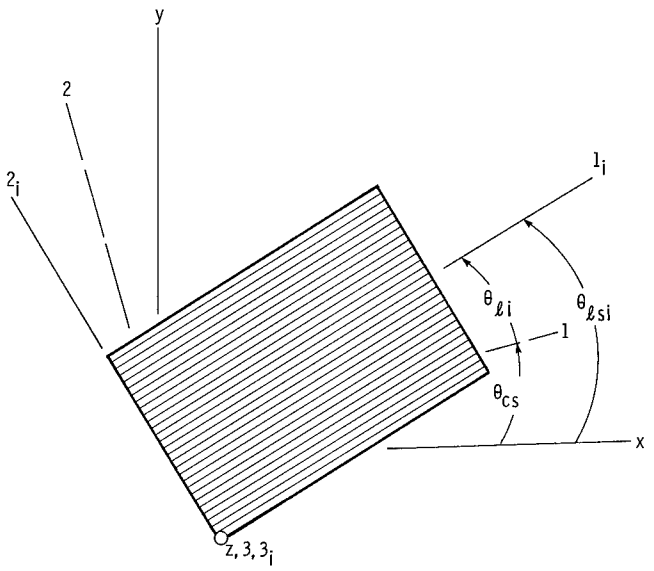

Figure 6.—Ply orientation geometry. Composite structural axes, x,y,z; composite material axes, 1,2,3; ply material axes (coincides with fiber direction), $1_i,2_i,3_i$.

measure θ from the material axes to obtain properties about the material axes. These composite properties are generated from the following equations:

$$[E_c] = \frac{1}{t_c}\left[\sum_{i=1}^{N_\ell}(z_{\ell i+1} - z_{\ell i})[R_{\ell i}]^T[E_{\ell i}][R_{\ell i}] + \sum_{j=1}^{N_{\ell-1}} H_j[S_j]\right]$$

$$\{\alpha_c\} = \frac{1}{t_c}[E_c]\sum_{i=1}^{N_\ell}(z_{\ell i+1} - z_{\ell i})[R_{\ell i}]^T[E_{\ell i}]\{\alpha_{\ell i}\}$$

$$\{\beta_c\} = \frac{1}{t_c}[E_c]\sum_{i=1}^{N_\ell}(z_{\ell i+1} - z_{\ell i})[R_{\ell i}]^T[E_{\ell i}]\{\beta_{\ell i}\}$$

The arrays $\{\alpha_c\}$, $\{\beta_c\}$, $\{\alpha_{\ell i}\}$, and $\{\beta_{\ell i}\}$ in the preceding equations are given by

$$\{\alpha_c\} = [\alpha_{cxx}\alpha_{cyy}\alpha_{czz}\alpha_{cyz}\alpha_{czx}\alpha_{cxy}]^T$$

$$\{\beta_c\} = [\beta_{cxx}\beta_{cyy}\beta_{czz}\beta_{cyz}\beta_{czx}\beta_{cxy}]^T$$

and

$$\{\alpha_{\ell i}\} = [\alpha_{\ell 11}\alpha_{\ell 22}\alpha_{\ell 33}\ 0\ 0\ 0]^T$$

$$\{\beta_{\ell i}\} = [\beta_{\ell 11}\beta_{\ell 22}\beta_{\ell 33}\ 0\ 0\ 0]^T$$

For all practical purposes, the two-dimensional thermal coefficients of expansion about the composite structural axes are the same as α_{cxx}, α_{cyy}, and α_{cxy} in the array $\{\alpha_c\}$ for the three-dimensional case.

The matrix $[E_c]^{-1}$ is given by

$$[E_c]^{-1} = \begin{bmatrix} \frac{1}{E_{c11}} & -\frac{\nu_{c21}}{E_{c22}} & \frac{\nu_{c31}}{E_{c33}} & 0 & 0 & 0 \\ -\frac{\nu_{c12}}{E_{c11}} & \frac{1}{E_{c22}} & -\frac{\nu_{c32}}{E_{c33}} & 0 & 0 & 0 \\ -\frac{\nu_{c13}}{E_{c11}} & -\frac{\nu_{c23}}{E_{c22}} & -\frac{1}{E_{c33}} & 0 & 0 & 0 \\ 0 & 0 & 0 & \frac{1}{E_{c23}} & 0 & 0 \\ 0 & 0 & 0 & 0 & \frac{1}{E_{c31}} & 0 \\ 0 & 0 & 0 & 0 & 0 & \frac{1}{E_{c12}} \end{bmatrix}$$

Note that for the case of an anisotropic material, the elements (1,6), (2,6), (3,6), and (4,5) and their symmetric parts will not be zero.

The matrices $[E_{\ell i}]^{-1}$ and $[R_{\ell i}]^{-1}$ are given by

$$[E_{\ell i}]^{-1} = \begin{bmatrix} \frac{1}{E_{\ell 11}} & -\frac{\nu_{\ell 21}}{E_{\ell 22}} & -\frac{\nu_{\ell 31}}{E_{\ell 33}} & 0 & 0 & 0 \\ -\frac{\nu_{\ell 12}}{E_{\ell 11}} & \frac{1}{E_{\ell 22}} & -\frac{\nu_{\ell 32}}{E_{\ell 33}} & 0 & 0 & 0 \\ -\frac{\nu_{\ell 13}}{E_{\ell 11}} & -\frac{\nu_{\ell 23}}{E_{\ell 22}} & \frac{1}{E_{\ell 33}} & 0 & 0 & 0 \\ 0 & 0 & 0 & \frac{1}{E_{\ell 23}} & 0 & 0 \\ 0 & 0 & 0 & 0 & \frac{1}{E_{\ell 31}} & 0 \\ 0 & 0 & 0 & 0 & 0 & \frac{1}{E_{\ell 12}} \end{bmatrix}_i$$

$$[R_{\ell i}] = \begin{bmatrix} \cos^2\theta & \sin^2\theta & 0 & 0 & 0 & \frac{1}{2}\sin 2\theta \\ \sin^2\theta & \cos^2\theta & 0 & 0 & 0 & -\frac{1}{2}\sin 2\theta \\ 0 & 0 & 1 & 0 & 0 & 0 \\ 0 & 0 & 0 & \cos\theta & \sin\theta & 0 \\ 0 & 0 & 0 & -\sin\theta & \cos\theta & 0 \\ -\sin 2\theta & \sin 2\theta & 0 & 0 & 0 & \cos 2\theta \end{bmatrix}_i$$

where $\theta = \theta_{\ell i}$ for properties about the composite material and $\theta = \theta_{\ell i} + \theta_{cs}$ for properties about the composite structural axes. (See fig. 6.)

The matrix $[S_{\ell j}]$ is given by

$$[S_{\ell j}] = \frac{1}{4}\begin{bmatrix} A^2 & -A^2 & 0 & 0 & 0 & -AB \\ -A^2 & A^2 & 0 & 0 & 0 & AB \\ 0 & 0 & 0 & 0 & 0 & 0 \\ 0 & 0 & 0 & 0 & 0 & 0 \\ 0 & 0 & 0 & 0 & 0 & 0 \\ -AB & AB & 0 & 0 & 0 & B^2 \end{bmatrix}_j$$

Here $A = \sin 2\theta_i - \sin 2\theta_{i-1}$ and $B = \cos 2\theta_i - \cos 2\theta_{i-1}$ where $i > 1$ and denotes the ply index.

The angles θ_i and θ_{i-1} (fig. 6) are given by

$\theta_i = \theta_{\ell i} + \theta_{cs}$

$\theta_{i-1} = \theta_{\ell i-1} + \theta_{cs}$

The composite heat capacity is the same for both the two- and the three-dimensional cases. It is given by

$$h_c = \frac{1}{t_c}\sum_{i=1}^{N_\ell} h_{\ell i} t_{\ell i}$$

and t_c is given by

$$t_c = \sum_{i=1}^{N_\ell} t_{\ell i}$$

The composite three-dimensional heat conductivities along the composite material axes, assuming an orthotropic composite, are given by

$$K_{c11} = \frac{1}{t_c} \sum_{i-1}^{N_\ell} t_{\ell i} (K_{\ell 11} \cos^2 \theta_\ell + K_{\ell 22} \sin^2 \theta_\ell)_i$$

$$K_{c22} = \frac{1}{t_c} \sum_{i-1}^{N_\ell} t_{\ell i} (K_{\ell 11} \sin^2 \theta_\ell + K_{\ell 22} \cos^2 \theta_\ell)_i$$

$$\frac{1}{K_{c33}} = \frac{1}{t_c} \sum_{i-1}^{N_\ell} \left(\frac{t_\ell}{K_{\ell 33}} \right)_i$$

The angle θ_ℓ is measured from the material axes (fig. 6)

The composite two-dimensional heat conductivities along the composite structural axes are given by (see ref. 9 for the transformation equations)

$$K_{cxx} = \frac{1}{t_c} \sum_{i-1}^{N_\ell} t_{\ell i} (K_{\ell 11} \cos^2 \theta + K_{\ell 22} \sin^2 \theta)_i$$

$$K_{cyy} = \frac{1}{t_c} \sum_{i=1}^{N_\ell} t_{\ell i} (K_{\ell 11} \sin^2 \theta + K_{\ell 22} \cos^2 \theta)_i$$

$$K_{cyx} = K_{cxy} = \frac{1}{t_c} \sum_{i=1}^{N_\ell} t_{\ell i} (K_{\ell 22} - K_{\ell 11})_i \sin 2\theta_i$$

$$K_{czz} = K_{c33}$$

The angle θ in the last set of equations is measured from the composite structural axes and is equal to $\theta_{cs} + \theta_\ell$. The inputs to the subroutine are N_ℓ, $z_{\ell i+1}$, $z_{\ell i}$, θ_{cs}, $\theta_{\ell i}$, $[E_i]$, H_j, $\{\alpha_{\ell i}\}$, $h_{\ell i}$, and $\{K_{\ell i}\}$, which are all global. The variable N_ℓ is input data. The remaining quantities are either generated or are transferred from information stored in PL(11,I), PL(13,I), PL(15,I-23,I), PL(8,I), PL(24,I) to PL(26,I), PL(30,I), PL(27,I), and PL(29,I). The outputs are t_c and the arrays are $[E_c]^{-1}$, $\{\alpha_c\}$, $[E_c]$, h_c, and $\{K_c\}$. The composite thickness t_c is stored in PC(2). The arrays $[E_c]^{-1}$, $\{\alpha_c\}$, and $[E_c]$ for both composite material and structural axes are printed out under the headings 3-D COMPOSITE STRAIN STRESS TEMPERATURE MOISTURE RELATIONS-STRUCTURAL AXES and 3-D COMPOSITE STRESS STRAIN RELATIONS-STRUCTURAL AXES.

The composite material axes properties $[E_c]$ and $\{\alpha_c\}$ are stored in PC(3) to PC(14) as global variables. The corresponding moduli are stored in PC(19) to PC(30). The three-dimensional heat conductivities and heat capacity along the material axes are stored in PC(15) to PC(18). The two-dimensional thermal coefficients of expansion along the structural axes are stored in PC(48) to PC(50). The two-dimensional heat conductivities and heat capacity along the structural axes are stored in PC(51) to PC(54). Note that the heat capacity is a scalar quantity and is independent of the reference axes. Therefore, PC(54) equals PC(18). The moisture diffusivities and expansion coefficients are stored in entries PC(55) to PC(62).

Subroutine BLOCK DATA.—In this block, the strings C_{e1} and C_{e2}, which are printed out with the composite constitutive equations, are defined. The string C_{e1} contains the resultant force notation N_{cx}, N_{cy}, N_{cxy}, M_{cx}, M_{cy}, and M_{cxy}. The string C_{e2} contains the notation for the corresponding displacements.

Subroutine GPCFD2 (RESF, DISP, PROPC).—This subroutine generates the required section properties and the force-deformation temperature-moisture relations for a two-dimensional

multilayered composite. It also generates the plane-stress elastic constants for the composite. The force-deformation temperature-moisture relations generated in this procedure are defined in the following equation:

$$\begin{Bmatrix} \{N_{cx}\} \\ \{M_{cx}\} \end{Bmatrix} = \begin{bmatrix} [A_{cx}] & [C_{cx}] \\ [C_{cx}] & [D_{cx}] \end{bmatrix} \begin{Bmatrix} \epsilon_{csx} \\ w_{cbx} \end{Bmatrix} - \begin{Bmatrix} \{N_{cT_\ell x}\} \\ \{M_{cT_\ell x}\} \end{Bmatrix} - \begin{Bmatrix} \{N_{cM_\ell x}\} \\ \{M_{cM_\ell x}\} \end{Bmatrix}$$

The generic equations for the elements in the arrays $[A_{cx}]$, $[C_{cx}]$, $[D_{cx}]$, $\{N_{cT_\ell x}\}$, $\{M_{cT_\ell x}\}$, $\{N_{cM_\ell x}\}$, and $\{M_{cM_\ell x}\}$ are

$$[A_{cx}] = \sum_{i=1}^{N_\ell} (z_{\ell i+1} - z_{\ell i})[R_{\ell i}]^T [E_{\ell i}]^{-1} [R_{\ell i}] + \sum_{j=1}^{N_\ell - 1} H_j [S_j]$$

$$[C_{cx}] = \frac{1}{2} \sum_{i=1}^{N_\ell} (z_{\ell i+1}^2 - z_{\ell i}^2)[R_{\ell i}]^T [E_{\ell i}]^{-1} [R_{\ell i}] + \sum_{j=1}^{N_\ell - 1} z_{rpj} H_j [S_j]$$

$$[D_{cx}] = \frac{1}{3} \sum_{i-1}^{N_\ell} (z_{\ell i+1}^3 - z_{\ell i}^3)[R_{\ell i}]^T [E_{\ell i}]^{-1} [R_{\ell i}] + \frac{1}{2} \sum_{j=1}^{N_\ell - 1} z_{rpj}^2 H_j [S_j]$$

$$\{N_{cT_\ell x}\} = \sum_{i=1}^{N_\ell} \Delta T_{\ell i} (z_{\ell i+1} - z_{\ell i})[R_{\ell i}][E_{\ell i}]^{-1} \{\alpha_{\ell i}\}$$

$$\{N_{cM_\ell x}\} = \sum_{i=1}^{N_\ell} M_{\ell i} (z_{\ell i+1} - z_{\ell i})[R_{\ell i}][E_{\ell i}]^{-1} \{\beta_{\ell i}\}$$

$$\{M_{cT_\ell x}\} = \frac{1}{2} \sum_{i=1}^{N_\ell} \Delta T_{\ell i} (z_{\ell i+1}^2 - z_{\ell i}^2)[R_{\ell i}]^T [E_{\ell i}]^{-1} \{\alpha_{\ell i}\}$$

$$\{M_{cM_\ell x}\} = \frac{1}{2} \sum_{i=1}^{N_\ell} M_{\ell i} (z_{\ell i+1}^2 - z_{\ell i}^2)[R_{\ell i}]^T [E_{\ell i}]^{-1} \{\beta_{\ell i}\}$$

where $\Delta T_{\ell i} = T_{\ell i} - T_{cui}$

The arrays $\{\alpha_{\ell i}\}$, $\{\beta_{\ell i}\}$, $[R_{\ell i}]$, $[E_{\ell i}]$, and $[S_j]$ are

$$\{\alpha_{\ell i}\} = [\alpha_{11} \quad \alpha_{22} \quad 0]_i^T$$

$$\{\beta_{\ell i}\} = [\beta_{11} \quad \beta_{22} \quad 0]_i^T$$

$$[R_{\ell i}] = \begin{bmatrix} \cos^2\theta & \sin^2\theta & \frac{1}{2}\sin 2\theta \\ \sin^2\theta & \cos^2\theta & -\frac{1}{2}\sin 2\theta \\ -\sin 2\theta & \sin 2\theta & \cos 2\theta \end{bmatrix}_i$$

$$[E_{\ell i}] = \begin{bmatrix} \frac{1}{E_{\ell 11}} & -\frac{\nu_{\ell 21}}{E_{\ell 22}} & 0 \\ -\frac{\nu_{\ell 12}}{E_{\ell 11}} & \frac{1}{E_{\ell 22}} & 0 \\ 0 & 0 & \frac{1}{G_{\ell 12}} \end{bmatrix}_i$$

$$S_{j22} = S_{j11} = \frac{1}{4}(\sin 2\theta_i - \sin 2\theta_{i-1})^2$$

$$S_{j21} = S_{j12} = -S_{j11}$$

$$S_{j32} = S_{j23} = \frac{1}{4}(\sin 2\theta_i - \sin 2\theta_{i-1})(\cos 2\theta_i - \cos 2\theta_{i-1})$$

$$S_{j31} = S_{j13} = -S_{j23}$$

$$S_{j33} = \frac{1}{4}(\cos 2\theta_i - \cos 2\theta_{i-1})^2$$

Here θ_i equals the $\theta_{cs} + \theta_\ell$ (fig. 6). The reduced bending rigidities (ref. 6) are generated in this procedure according to the equation

$$D_{cx}^R = [D_{cx} - C_{cx} A_{cx}^{-1} C_{cx}]$$

The reduced axial stiffnesses are generated in the procedure according to the equation

$$A_{cx}^R = [A_{cx} - C_{cx} D_{cx}^{-1} C_{cx}]$$

The two-dimensional composite elastic constants are generated from the following equation (assuming $T_{\ell i} = T_\ell$ for $i = 1$ to N_ℓ and $M_{\ell i} = M_\ell$ for $i = 1$ to N_ℓ):

$$[E_{cx}]^{-1} = \frac{1}{t_c}\left\langle \sum_{i=1}^{N_\ell} (z_{\ell i+1} - z_{\ell i})[R_{\ell i}]^T [E_{\ell i}]^{-1} [R_{\ell i}] + \sum_{j=1}^{N_\ell} H_j [S_j] \right\rangle$$

where

$$t_c = \sum_{i=1}^{N_\ell} t_{\ell i}$$

The inputs to this subroutine are $t_{\ell i}$, $T_{\ell i}$, $M_{\ell i}$, θ_i (relative to composite structural axes), H_j, and the ply elastic constants. These quantities are global and are located, respectively, in PL(7,I), PL(50,I), PL(72,I), PL(14,I), PL(9,I), and PL(31,I) to PL(42,I). The arrays $[R_{\ell i}]^T$, $[E_{\ell i}]^{-1}$, $[R_{\ell i}]$, and $[S_j]$ and the dimensions $z_{\ell i}$ are generated within this subroutine.

The outputs are the force-deformation temperature-moisture relations, which are stored in the global arrays ACX $= A_{cx}$, RAC $= A_{cx}^R$, CPC $= C_{cx}$, FLX $= D_{cx}$, RDC $= D_{cx}^R$, NSDT $= N_{cT_\ell x}$, MSDT $= M_{cT_\ell x}$, NSDH $= N_{cM_\ell x}$, and MSDH $= M_{cM_\ell x}$. These are printed out under the heading

FORCES FORCE DISPLACEMENT RELATIONS DISPL T-FORCES H-FORCES. The reduced bending rigidities are printed out under the heading REDUCED BENDING RIGIDITIES. The reduced axial stiffnesses are printed out under the heading REDUCED STIFFNESS MATRIX. The inverse of the constitutive equations

$$\begin{bmatrix} [A_{cx}] & [C_{cx}] \\ [C_{cx}] & [D_{cx}] \end{bmatrix}^{-1}$$

are printed out under the heading DISP DISPLACEMENT FORCE RELATIONS FORCES. The distances z_c, $z_{\ell i}$, and $z_{\ell i}$ are stored in PC(31,I), PL(10,I), and PL(11,I), respectively. The two-dimensional composite stress-strain relations are stored in PC(33) to PC(38), and the two-dimensional composite moduli and Poisson's ratios are stored in PC(39) to PC(47). The two-dimensional thermal properties are stored in PC(48) to PC(54), as is described in the section subroutine GACD3.

Subroutine COMSA (M).—In this subroutine the stress and strain states of each ply are computed given the edge membrane forces, the ply temperature, and the changes in curvature. In addition, two-ply, combined stress-strength criteria and the interply delamination criterion are generated. Also generated are the ply stress-strain influence coefficients. The equations programmed for the ith strain and stress states are

$$\{\epsilon_{\ell i}\} = [R_{\ell i}][A_{cx}]^{-1}\left\langle \{N_{cx}\} + \{N_{cT_\ell x}\} + \{N_{cM_\ell x}\} + [C_{cx}]\{w_{cbx}\}\right\rangle - z[R_{\ell i}]\{w_{cbx}\}$$

$$\{\sigma_{\ell i}\} = [E_{\ell i}]^{-1}[R_{\ell i}][A_{cx}]^{-1}\left\langle \{N_{cx}\} + \{N_{cT_\ell x}\} + \{N_{cM_\ell x}\} + [C_{cx}]\{w_{cbx}\}\right\rangle$$
$$- [E_{\ell i}]^{-1}\left\langle T_{\ell i}\{\alpha_{\ell i}\} + M_{\ell i}\{\beta_{\ell i}\} + z[R_{\ell i}]\{w_{cbx}\}\right\rangle$$

The reference plane strains ϵ_{csx} and the curvature changes are computed from

$$\begin{Bmatrix} \{\epsilon_{csx}\} \\ \{w_{cbx}\} \end{Bmatrix} = \begin{bmatrix} [A_{cx}] & [C_{cx}]^{-1} \\ [C_{cx}] & [D_{cx}] \end{bmatrix} \left\langle \begin{Bmatrix} \{N_{cx}\} \\ \{M_{cx}\} \end{Bmatrix} + \begin{Bmatrix} \{N_{cT_\ell x}\} \\ \{M_{cT_\ell x}\} \end{Bmatrix} + \begin{Bmatrix} \{N_{cM_\ell x}\} \\ \{M_{cM_\ell x}\} \end{Bmatrix} \right\rangle$$

when either the membrane force or the moments or both are given.

The strains are generated locally in EPSL and SIGL, respectively, and are stored in PL(64,I) to PL(69,I). The matrices $[R_{\ell i}]$ and $[E_{\ell i}]$ are generated locally from information transferred from PL(14,I) and PL(31,I) to PL(42,I). The distance $z_{\ell i}$, the ply temperature $T_{\ell i}$, and the ply moisture $M_{\ell i}$ are transferred from PL(11,I), PL(50,I), and PL(72,I), respectively. The remaining matrices are

$A_{cx} \rightarrow$ ACX
$C_{cx} \rightarrow$ CPC
$N_{cT_\ell x} \rightarrow$ NSDT
$N_{cM_\ell x} \rightarrow$ NSDH
$N_{cx} \rightarrow \text{NSB}_m$
$M_{cT_\ell x} \rightarrow$ MSDT
$M_{cm_\ell x} \rightarrow$ MSDH
$M_{cx} \rightarrow \text{MSB}_m$

and $w_{cbx} \rightarrow \text{WXX}_m$ (local curvature from bending analysis), where m denotes the load condition.

It is important to note that the stress analysis in the coded form also handles the case where both the reference plane membrane strains and the local curvatures are given. In this case the ply strains are given by

$$\{\epsilon_{cxi}\} = \{\epsilon_{csx}\} - z\{w_{cbx}\}$$

where $\{\epsilon_{cxi}\}$ is the ith ply strain along the structural axis, $\{\epsilon_{csx}\}$ is the reference plane membrane strain, z is the distance from the reference plane to the centroid of the ith ply, and $\{w_{cbx}\}$ is the local curvature. These variables are read in the array D_{vm}, where m denotes the load condition.

The corresponding ith ply stresses are given by

$$\{\sigma_i\} = [E_{ij}]^{-1}\left\langle [R_{ij}]\{\epsilon_{cxi}\} - \Delta T_{ij}\{\alpha_{ij}\} - M_{ij}\{\beta_{ij}\}\right\rangle$$

$$\Delta T_{ij} = T_{ij} - T_{cui}$$

where $\{\sigma_{ij}\}$ is the ith ply stress along the material axes, $\{E_{ij}\}$ is the ith ply elastic constant about the material axes, $\{R_{ij}\}$ is the transformation matrix of the ith ply, $\{\epsilon_{cxi}\}$ is the ith ply strain along the structural axes as given by a previous equation, T_{ij} is the temperature of the ith ply, T_{cui} is the cure temperature of the ith ply, $\{\alpha_{ij}\}$ is the thermal coefficient of expansion of the ith ply along the material axes, M_{ij} is the moisture content of the ith ply, and $\{\beta_{ij}\}$ is the moisture expansion coefficient of the ith ply along the material axes.

The displacement force relations are printed out in the following format:

DISPLACEMENT	DISPLACEMENT FORCE RELATIONS	FORCES
$\begin{Bmatrix} \{U_{cx}\} \\ \{W_{cx}\} \end{Bmatrix}$	$\begin{bmatrix} [A_{cx}] & [C_{cx}] \\ [C_{cx}] & [D_{cx}] \end{bmatrix}^{-1}$	$\begin{Bmatrix} \{N_{cx}\} \\ \{M_{cx}\} \end{Bmatrix}$

Two similar sets are printed out. In the first set, the displacement and force vectors are in symbolic form. In the second set, the displacement and force vectors have their numerical values. (See outputs of trial cases, app. B.)

The failure criterion may be determined by either of the following methods:

(1) Modified distortion energy

$$F = 1 - \left[\left(\frac{\sigma_{\ell 11\alpha}}{S_{\ell 11\alpha}}\right)^2 + \left(\frac{\sigma_{\ell 22\beta}}{S_{\ell 11\beta}}\right)^2 - K_{\ell 12\beta}\frac{\sigma_{\ell 11\alpha}}{S_{\ell 11\alpha}}\frac{\sigma_{\ell 22}}{S_{\ell 22}} + \left(\frac{\sigma_{\ell 12S}}{S_{\ell 12S}}\right)^2\right]_i \rightarrow \text{PL(62,I)}$$

The parameters α and β are specified as follows:

$$\alpha = \begin{cases} T & \sigma_{\ell 11} \geq 0 \\ C & \sigma_{\ell 11} < 0 \end{cases}$$

$$\beta = \begin{cases} T & \sigma_{\ell 22} \geq 0 \\ C & \sigma_{\ell 22} < 0 \end{cases}$$

$$S_{\ell 11\alpha} = \begin{cases} S_{\ell 11T} & \alpha = T \\ \min(S_{\ell 11C}, S_{\ell 11CD}) & \alpha = C \end{cases}$$

$$S_{\ell 22\alpha} = \begin{cases} S_{\ell 22T} & \beta = T \\ S_{\ell 22C} & \beta = C \end{cases}$$

$$K_{\ell 12\alpha\beta} = K'_{\ell 12\alpha\beta} \frac{(1+4\nu_{\ell 12}-\nu_{\ell 13})E_{\ell 22}+(1-\nu_{\ell 23})E_{\ell 11}}{\left[E_{\ell 11}E_{\ell 22}(2+\nu_{\ell 12}+\nu_{\ell 13})(2+\nu_{\ell 21}+\nu_{\ell 23})\right]^{1/2}}$$

$$K'_{\ell 12\alpha\beta} = \begin{cases} \text{BET}(1,7) & \alpha, \beta = T \\ \text{BET}(2,7) & \alpha = C,\ \beta = T \\ \text{BET}(1,8) & \alpha = T,\ \beta = C \\ \text{BET}(2,8) & \alpha, \beta = C \end{cases}$$

The multiplier of $K'_{\ell 12\alpha\beta}$ was generated in the main program and is stored in PL(61,I). The constant $K'_{12\alpha\beta}$ constitute theory-experiment correlation factors. These are set as unity in COMSA. However, the user can modify the correlation factors if he/she wishes, by redefining the matrix BET in the subroutine COMSA.

(2) Hoffman's criterion (ref. 9)

$$S_{\ell 11C} = \min(S_{\ell 11C},\ S_{\ell 11CD})$$

$$F = 1 - \left[\frac{\sigma^2_{\ell 11} - \sigma_{\ell 11}\sigma_{P22}}{S_{\ell 11c}S_{\ell 11T}} + \frac{\sigma^2_{\ell 22}}{S_{\ell 22C}S_{\ell 22T}} + \frac{S_{\ell 11C}-S_{\ell 11T}}{S_{\ell 11C}S_{\ell 11T}}\sigma_{\ell 11} + \frac{S_{\ell 22C}-S_{\ell 22T}}{S_{\ell 22C}S_{\ell 22T}}\sigma_{\ell 22} + \frac{\sigma^2_{\ell 12}}{S^2_{\ell 12S}} \right]_i \rightarrow \text{PL}(71,\text{I})$$

F > 0 no failure
F = 0 incipient failure
F < 0 failure

The interply delamination criterion for the jth interply layer at the mth load condition is governed by

$$\left[1 - \left(\frac{|\Delta\varphi|}{\Delta\varphi_{\text{del}}}\right)\right]_j \rightarrow \text{PL}(63,\text{I}) \qquad \text{when } i > 1$$

$$\Delta\varphi j = \frac{1}{2}(\epsilon_{cyy}-\epsilon_{cxx})(\sin 2\theta_i - \sin 2\theta_{i-1}) + \frac{1}{2}\epsilon_{cxy}(\cos 2\theta_i - \cos 2\theta_{i-1})\{\epsilon_{cx}\} = \{A_{cx}\}^{-1}$$
$$\left\langle \{N_{cx}\} + \{N_{cT_\ell x}\} + \{N_{cM_\ell x}\} + [C_{cx}]\{w_{cbx}\} \right\rangle$$

or by the displacement force equation described previously.

The inputs to the subroutine are the ply angle measured from the structural axes (θ_i, from PL(14,I)); the distance from the reference plane to the centroid of the ply ($z_{\ell i}$, from PL(11,I)); the ply temperature ($T_{\ell i}$, from PL(50,I)); the interply delamination limit ($\Delta\varphi_{\text{del}j}$, from PL(60,I)); the ply thermoelastic properties stored in PL(24 to 26,I) and PL(31 to 42,I); the ply extensional and coupling rigidities, A_{cx} = ACX and C_{cx} = CPC; the local curvatures w_{cbx} = WXX; the adjustment constants $K'_{\ell 12TT}$ = BET(1, 7), $K'_{\ell 12CT}$ = BET (2, 7), $K'_{\ell 12TC}$ = BET(1, 8), and $K'_{\ell 12CC}$ = BET(2, 8); and the load conditions N_{cx} = NBS(m).

The subroutine outputs are the modified distortion energy PL(62,I), Hoffman's criterion PL(71,I), the interply delamination criterion PL(63,I), and the adjacent ply relative rotation ($\Delta\varphi j$, from PL(70,I)).

Subroutine EDGSTR.—This subroutine computes the interlaminar stresses σ_{zz}, σ_{zy}, and σ_{zx} near a straight free edge region of a finite width, infinitely long plate under uniform extension. The equations used are based on an approximate formulation analogous to that in reference 18. The calculations are performed in two parts. The first part consists of computations of decay lengths for

the interlaminar stresses. The decay length is a measure of a free edge region in which the interlaminar stresses may be significant. This is achieved in the main program. The second part uses this information to compute the interlaminar stresses in the subroutine EDGSTR. The pertinent equations are discussed in the following paragraphs. Note that in the case of hybrid composite plies, the calculations are repeated not only for the primary composite but also for the secondary composite by using the appropriate ply constituent properties. The primary and the secondary composites are distinguished by using the letters P and S, respectively, in the Fortran variables. In the case of biaxial loading, this subroutine is bypassed as there are no free edges.

Part 1.—Decay length or boundary layer width computations. The interlaminar stresses near the free edge are assumed to decay exponentially. The decay length is calculated with the aid of the following equations:

$$\{\ell_b\} = \frac{-\alpha_{t\ell}}{\lambda}\left(\frac{t_\ell}{t_c}\right)$$

where

$$\alpha = \ell_n^{-1}\ (0.001)$$

and

$$\{\lambda\} = \left\{\frac{G_m}{E_{\ell yy}}\left[\sqrt{\frac{\pi}{4(1-k_\nu)k_f}} - 1\right]\right\}^{1/2}$$

The calculations are repeated for each layer. Quantities ℓ_b and λ_i are stored in arrays YPL and PLMDAY. These quantities pertain to the free edge parallel to the load axis X. The corresponding quantities for the load axis parallel to Y are stored in arrays XPL and PLMDAX. These are computed by replacing $E_{\ell yy}$ with $E_{\ell xx}$ in the preceding equations. For the intraply hybrid composite, the respective arrays for the secondary composite are denoted by YSL, SLMDAY, XSL, and SLMDAX. Note that the letter P is replaced by S. This notation is followed consistently throughout the text. The labeled common block ILAB6 is used to store and pass these data to subroutine EDGSTR.

Part 2.—Interlaminar stress computations. In the EDGSTR subroutine, the ply stresses PL(67,I) to PL(69,I) are transformed to the structural coordinate system x, y, and z. These stresses are stored in the matrix SIGMA (3,I) for each layer. The interlaminar stresses $\{\sigma_{\ell zz}\}$ are computed with the aid of the following relations:

$$\sigma^i_{\ell_{zz}} = \alpha^2\left(\frac{t^i_\ell}{\ell^i_b}\right)^2\left[\frac{\sigma^i_{\ell yy}}{2} + \frac{1}{t^i_\ell}\sum_{j=N_\ell}^{j+1}\sigma^j_{\ell yy}t^j_\ell\right]$$

for $i = N_{\ell-1}$ to $N_\ell/2+1$

$$\sigma^{N_\ell}_{\ell zz} = \alpha^2\left(\frac{t^{N_\ell}_\ell}{L^{N_\ell}_b}\right)^2\frac{\sigma^{N_\ell}_{\ell yy}}{2}$$

The interlaminar shear stresses $\{\sigma_{\ell zy}\}$ and $\{\sigma_{\ell zx}\}$ are calculated by

$$\sigma^i_{\ell zy} = \frac{\alpha}{(e^\alpha - 1)}\frac{\sum_{j=N_\ell}^{j+1}\sigma^j_{\ell yy}t^j_\ell}{\ell^i_b} \qquad for\ i = N_\ell \text{ to } \frac{N_\ell}{2}+1$$

and

$$\sigma^i_{\ell xx} = \frac{3\sum_{j=N_\ell}^{j+1} \sigma^j_{\ell ny}}{\ell^i_b} \qquad \text{for } i = N_\ell \text{ to } \frac{N_\ell}{2} + 1$$

In these equations, the computations are started from the top layer ($i = N_\ell$). After the midplane is approached ($i = N_\ell/2 + 1$), the calculations are repeated starting from the bottom layer ($i = 1$) and continued until i becomes ($N_\ell/ - 1$).

The interlaminar stresses are stored in the arrays YSZZP, SZYP, and SZXP for the primary composite and in the arrays YSZZS, SZYS, and SZXS for the secondary composite. They are, however, made dimensionless by dividing by the applied normal stress $\sigma_{\ell xx}$.

Subroutine STRCNF.—This subroutine calculates the stress concentration factors around a circular hole due to membrane loading. The equations used are taken from reference 19 and are strictly applicable for infinite plates. Three factors are computed in the subroutine and are defined by the following equations:

$$K_{1xx} = \frac{\sigma_{\theta\theta}}{\sigma_{xx\infty}}$$

$$K_{1yy} = \frac{\sigma_{\theta\theta}}{\sigma_{yy\infty}}$$

$$K_{1xy} = \frac{\sigma_{\theta\theta}}{\sigma_{xy\infty}}$$

Quantities $\sigma_{xx\infty}$, $\sigma_{yy\infty}$, and $\sigma_{xy\infty}$ are the applied stresses, and $\sigma_{\theta\theta}$ is the hoop stress at any angle θ from the load axis. The stress concentration factors are stored in the local arrays XK1, XK3, and TEMP. The expressions for K_{1xx}, K_{1yy}, and K_{1xy} are the following:

$$K_{1xx} = \frac{E_{ctt}}{E_{cxx}}\left\{-\sqrt{\frac{E_{cxy}}{E_{cyy}}}\cos^2\theta + \left[1 + \sqrt{2\left(\frac{E_{cxx}}{E_{cyy}} - \nu_{cxy}\right)} + \frac{E_{cxx}}{G_{cxy}}\right]\sin^2\theta\right\}$$

$$K_{1yy} = \frac{E_{crr}}{E_{cxx}}\left\{-\sqrt{\frac{E_{cyy}}{E_{cxx}}}\cos^2\theta + \left[1 + \sqrt{2\left(\frac{E_{cyy}}{E_{cxx}} - \nu_{cxy}\right)} + \frac{E_{cyy}}{G_{cxy}}\right]\sin^2\theta\right\}$$

$$K_{1xy} = \frac{E_{ctt}}{E_{cxx}}\left\{1 + \sqrt{\frac{E_{cxx}}{E_{cyy}}} + \left[\sqrt{2\left(\frac{E_{cxx}}{E_{cyy}} - \nu_{cxy}\right)} + \frac{E_{cxx}}{G_{cxy}}\right] - \left[\sqrt{2\left(\frac{E_{cxx}}{E_{cyy}} - \nu_{cxy}\right)} + \frac{E_{cxx}}{G_{cxy}}\sin 2\theta\right]\right\}$$

In the preceding expressions, E_{ctt} and E_{crr} are the composite moduli in the tangential and radial directions at angle θ. Angle θ is measured from the x-axis for K_{1xx} and K_{1xy} and from the y-axis for K_{1yy}. The program rearranges the computed K_{1yy} values so that they correspond to the same location as those of K_{1xx} and K_{1xy}.

Subroutine NUDIFS.—In this subroutine, the Poisson's ratio differences between the adjacent plies and the composite are computed around a circular hole at 5° intervals. The products of the differences and the corresponding stress concentration factors are computed next. These products are expected to provide insight into the probable delamination locations. It is assumed that onset of

delamination is likely to occur at the locations for which the product of Poisson's ratio mismatch with the corresponding stress concentration factor is a maximum. Accordingly, these products are computed at 5° intervals and the maxima are calculated. Two sets of tables are the output from this subroutine. The first table comes out optionally if the boolean NONUDF is set to FALSE. It contains all the details of the computations. The second table consists of the summary of results, with notes on the maxima and the locations. The following are the programmed equations:

At any angle θ the Poisson's ratio is computed by

$$\nu_{crt} = E_{crr}\left[\frac{\nu_{cxy}}{E_{cxx}} - \left(\frac{1+2\nu_{cxy}}{E_{cxx}} + \frac{1}{E_{cyy}} - \frac{1}{G_{cxy}}\right)\cos^2\theta \sin^2\theta\right]$$

The ply Poisson's ratio is given by

$$\{\nu_{\ell rt}\} = E_{\ell rr}\left[\frac{\nu_{\ell 12}}{E_{\ell 11}} - \left(\frac{1+2\nu_{\ell 12}}{E_{\ell 11}} + \frac{1}{E_{\ell 22}} - \frac{1}{G_{\ell 12}}\right)\cos^2\theta \sin^2\theta\right]$$

The difference in Poisson's ratio between the ith and $(i+1)$th plies is given by $(\nu^{i+1}_{\ell rt} - \nu^{i}_{\ell rt})$, and the difference with respect to the composite is given by $(\nu^{i}_{\ell rt} - \nu_{crt})$. These are stored in the arrays A2 and A3, respectively. The products of K_{1xx}, K_{1yy}, *and* K_{1xy} with A3 are computed next and are stored in the arrays A5, A6, and A7, respectively. The maxima and their location in each of the four quadrants (0-90, 90-180, 180-270, and 270-0) are computed by calling the subroutine AMAXF for the three arrays A5, A6, and A7. The values of stress concentration factors are passed through the labeled common block ILAB8 from the subroutine STRCNF.

Subroutine MSCBFL (AINF).—A complete laminate failure stress analysis, based on first-ply failure and the maximum strength criteria, is performed in this subroutine. The inputs to this routine are the ply allowables $S_{\ell 11C}$, $S_{\ell 11T}$, $S_{\ell 22C}$, $S_{\ell 22T}$, and $S_{\ell 12S}$ and the ply influence coefficient matrix AINF. The ply stress allowables are generated by the INHYD routines and are stored in the ply properties array PL. These are accessed through the labeled common block ILAB2. The ply stress influence coefficients are generated by COMSA and the main program and are passed to the present routine by the subroutine argument.

The failure stress for a particular ply due to a specific loading is given by the ratio of the allowable strength to the ply stress influence coefficient. For example, the failure stress due to a tensile load is given by

$$S^i_c = \frac{S^i_{\ell 11T}}{\text{Fact}1^i}$$

where $\text{Fact}1^i$ is the stress influence coefficient for ith ply due to unit tensile loading, $S^i_{\ell 11T}$ is the strength allowable for ith ply in longitudinal tension, and S^i_c is the failure stress for the ith ply due to a tensile loading. The failure stresses are stored in the matrix FAILD. In the case of temperature/moisture presence, the allowable strengths are updated to take into account temperature or moisture stresses; the failure stresses are computed with and without the effects of temperature- and moisture-induced stresses for comparison. The program considers primarily five different loadings, longitudinal compression and tension, transverse compression, and tension and inplane shear.

After the failure load computations for each ply are determined, the active failure mode and the corresponding failure strength for each type of loading are determined by calling the subroutine AMINF. This subroutine returns the value of the minimum failure load, the ply number, and the failure mode as output. The output from this subroutine is printed under the heading LAMINATE FAILURE STRESS ANALYSIS.

Subroutine MCRSTR.—This subroutine generates the microstresses in the ply constituents due to the inplane loading. These are stored in the ply microproperty arrays PLMP and PLMS for the

primary and the secondary composites. The ply constituent properties and the applied loads are inputs to this subroutine. They are accessed with the aid of the common blocks PBANK, MFBANK, ILAB2, ILAB5, and ILAB9. The PLMP and PLMS each contain 41 entries which are explained in the following list:

Code name	*Algebraic notation*	*Fortran variable*
PLM(1,I)	σ_{m11L}	SM1L
PLM(2,I)	σ_{m11T}	SM1T
PLM(3,I)	σ_{f11L}	SF1L
PLM(4,I)	σ_{f11T}	SF1T
PLM(5,I)	$\sigma^{(A)}_{m22L}$	SM2AL
PLM(6,I)	$\sigma^{(A)}_{m22T}$	SM2AT
PLM(7,I)	$\sigma^{(B)}_{m22L}$	SM2BL
PLM(8,I)	$\sigma^{(B)}_{m22T}$	SM2BT
PLM(9,I)	$\sigma^{(B)}_{f22L}$	SF2BL
PLM(10,I)	$\sigma^{(B)}_{f22T}$	SF2BT
PLM(11,I)	$\sigma^{(A)}_{m33L}$	SM3AL
PLM(12,I)	$\sigma^{(A)}_{m33T}$	SM3AT
PLM(13,I)	$\sigma^{(B)}_{m33L}$	SM3BL
PLM(14,I)	$\sigma^{(B)}_{m33T}$	SM3BT
PLM(15,I)	$\sigma^{(B)}_{f33L}$	SF3BL
PLM(16,I)	$\sigma^{(B)}_{f33T}$	SF3BT
PLM(17,I)	$\sigma^{(A)}_{m12}$	SM12A
PLM(18,I)	$\sigma^{(B)}_{m12}$	SM12B
PLM(19,I)	$\sigma^{(B)}_{f12}$	SF12B
PLM(20,I)	$\sigma^{(A)}_{m13}$	SM13A
PLM(21,I)	$\sigma^{(B)}_{m13}$	SM13B
PLM(22,I)	$\sigma^{(B)}_{f13}$	SF13B
PLM(23,I)	$\sigma^{(A)}_{m23}$	SM23A
PLM(24,I)	$\sigma^{(B)}_{m23}$	SM23B

PLM(25,I)	$\sigma_{f23}^{(B)}$		SF23B
PLM(26,I)	σ_{m11}	Microstresses due to temperature gradient $\Delta T\ell$	SM11DT
PLM(27,I)	σ_{f11}		SF11DT
PLM(28,I)	$\sigma_{m22}^{(A)}$		SM2ADT
PLM(29,I)	$\sigma_{m22}^{(B)}$		SM2BDT
PLM(30,I)	$\sigma_{f22}^{(B)}$		SF2BDT
PLM(31,I)	$\sigma_{m33}^{(A)}$		SM3ADT
PLM(32,I)	$\sigma_{m33}^{(B)}$		SM3BDT
PLM(33,I)	$\sigma_{f33}^{(B)}$		SF3BDT
PLM(34,I)	σ_{m11}	Microstresses due to moisture M_ℓ	SM11DM
PLM(35,I)	σ_{f11}		SF11DM
PLM(36,I)	$\sigma_{m22}^{(A)}$		SM2ADM
PLM(37,I)	$\sigma_{m22}^{(B)}$		SM2BDM
PLM(38,I)	$\sigma_{f22}^{(B)}$		SF2BDM
PLM(39,I)	$\sigma_{m33}^{(A)}$		SM3ADM
PLM(40,I)	$\sigma_{m33}^{(B)}$		SM3BDM
PLM(41,I)	$\sigma_{f33}^{(B)}$		SF3BDM

In this list, entries 26 to 41 are suppressed automatically if the temperature gradients and moisture contents are not present. The superscripts A and B refer to two regions as described in figure 4.

The microstresses are calculated with the aid of the following equations: (For notation and sign conventions, see figs. 4 and 6.)

Ply microstresses due to a longitudinal stress $\sigma_{\ell 11}$ are given by

$$\sigma_{m11} = (E_m/E_{\ell 11})\sigma_{\ell 11}$$

$$\sigma_{f11} = (E_{f11}/E_{\ell 11})\sigma_{\ell 11}$$

$$\sigma_{m22}^{(A)} = (\nu_m - \nu_{\ell 12})(E_m/E_{11})\sigma_{\ell 11}$$

$$\sigma_{m22}^{(B)} = \sigma_{f22}^{(B)} = -\frac{1-\sqrt{k_f}}{\sqrt{k_f}}\sigma_{\ell 11}$$

$$\sigma_{m33}^{(A)} = \sigma_{m22}^{(A)}$$

$$\sigma_{m33}^{(B)} = \sigma_{m22}^{(B)}$$

$$\sigma_{f33}^{(B)} = \sigma_{f22}^{(B)}$$

Ply microstresses due to a transverse stress $\sigma_{\ell 22}$ are given by

$$\sigma_{m11} = \left(\nu_m - \frac{\nu_{\ell 12} E_m}{E_{\ell 11}}\right)\sigma_{\ell 22}$$

$$\sigma_{f11} = \left(\nu_{f12} - \nu_{\ell 12}\frac{E_{f11}}{E_{\ell 11}}\right)\sigma_{\ell 22}$$

$$\sigma_{m22}^{(A)} = (E_m/E_2)\sigma_{\ell 22}$$

$$\sigma_{m22}^{(B)} = (E_{\ell 22}/E_2)\sigma_{\ell 22}$$

$$\sigma_{f22}^{(B)} = (E_{\ell 22}/E_2)\sigma_{\ell 22}$$

where E_2 is given by

$$E_2 = (1-\sqrt{k_f})\,E_m + \frac{\sqrt{k_f}E_m}{1-\sqrt{k_f}\left(1-\frac{E_m}{E_{f22}}\right)}$$

$$\sigma_{m33}^{(A)} = (\nu_m/\nu_{\ell 23})(E_m/E_{\ell 22})\sigma_{\ell 22}$$

$$\sigma_{m33}^{(B)} = \frac{1-\sqrt{k_f}}{\sqrt{k_f}}\,\sigma_{\ell 22}$$

$$\sigma_{f33}^{(B)} = \sigma_{m33}^{(B)}$$

Ply microstresses due to inplane shear stress ($\sigma_{\ell 12}$) are given by

$$\sigma_{m12}^{(A)} = (G_m/G_{12})\sigma_{\ell 12}$$

$$\sigma_{m12}^{(B)} = (G_{\ell 12}/G_{12})\sigma_{\ell 12}$$

$$\sigma_{f12}^{(B)} = (G_{\ell 12}/G_{12})\sigma_{\ell 12}$$

where G_{12} is given by

$$G_{12} = \left(1 - \sqrt{k_f}\right) G_m + \frac{\sqrt{k_f} G_m}{1 - \sqrt{k_f}\left(1 - \frac{G_m}{G_{f23}}\right)}$$

$$\sigma_{m13}^{(A)} = \sigma_{m12}^{(A)}$$

$$\sigma_{m13}^{(B)} = \sigma_{m12}^{(B)}$$

$$\sigma_{f13}^{(B)} = \sigma_{f12}^{(B)}$$

Ply microstresses due to through-the-thickness shear stress $\sigma_{\ell 23}$ are given by

$$\sigma_{m23}^{(A)} = (G_m / G_{\ell 23}) \sigma_{\ell 23}$$

$$\sigma_{m23}^{(B)} = (G_{23} / G_{\ell 23}) \sigma_{\ell 23}$$

where G_{23} is given by

$$G_{23} = \frac{G_m}{1 - \sqrt{k_f}\left(1 - \frac{G_m}{G_{f23}}\right)}$$

$$\sigma_{f23}^{(B)} = \sigma_{m23}^{(B)}$$

Ply microstresses due to temperature gradient ΔT_ℓ are given by

$$\sigma_{m11} = (\alpha_{\ell 11} - \alpha_m) \Delta T_\ell E_m$$

$$\sigma_{f11} = (\alpha_{\ell 11} - \alpha_{f11}) \Delta T_\ell E_{f11}$$

$$\sigma_{m22}^{(A)} = (\alpha_{\ell 22} - \alpha_m) \Delta T_\ell E_m$$

$$\sigma_{m22}^{(B)} = \sigma_{f22}^{(B)} = -\frac{1 - \sqrt{k_f}}{\sqrt{k_f}} \sigma_{m22}^{(A)}$$

$$\sigma_{m33}^{(A)} = \sigma_{m22}^{(A)}$$

$$\sigma_{m33}^{(B)} = \sigma_{m22}^{(B)}$$

$$\sigma_{f33}^{(B)} = \sigma_{f22}^{(B)}$$

$$\Delta T_\ell = T_\ell - T_{cu}$$

Ply microstresses due to moisture M_ℓ are given by

$$\sigma_{m11} = (\beta_{\ell 11} - \beta_m) M_\ell E_m$$

$$\sigma_{f11} = \beta_{\ell 11} M_\ell E_{f11}$$

$$\sigma_{m22}^{(A)} = (\beta_{\ell 22} - \beta_m) M_\ell E_m$$

$$\sigma_{m22}^{(B)} = -\frac{1 - \sqrt{k_f}}{\sqrt{k_f}} \sigma_{m22}^{(A)}$$

$$\sigma_{m33}^{(A)} = \sigma_{m22}^{(A)}$$

$$\sigma_{m33}^{(B)} = \sigma_{m22}^{(B)}$$

$$\sigma_{f33}^{(A)} = \sigma_{f33}^{(A)}$$

Subroutine MINCOF.—This subroutine generates the microstress influence coefficients for each different material system used in the layup. The equations used are similar to those programmed for MCRSTR. However, the influence coefficients are based on the application of unit load in a specific direction or unit temperature difference or unit moisture content. The influence coefficients are stored in the matrix PINF. This matrix has 17 entries. They are described in the following list:

Entry	Algebraic notation	Fortran variable
PINF(1,K,NLD)	σ_{m11}	SM11
PINF(2,K,NLD)	$\sigma_{m22}^{(A)}$	SM22A
PINF(3,K,NLD)	$\sigma_{m22}^{(B)}$	SM22B
PINF(4,K,NLD)	$\sigma_{m12}^{(A)}$	SM12A
PINF(5,K,NLD)	$\sigma_{m12}^{(B)}$	SM12B
PINF(6,K,NLD)	$\sigma_{m13}^{(A)}$	SM13A
PINF(7,K,NLD)	$\sigma_{m13}^{(B)}$	SM13B
PINF(8,K,NLD)	$\sigma_{m23}^{(A)}$	SM23A
PINF(9,K,NLD)	$\sigma_{m23}^{(B)}$	SM23B

PINF(10,K,NLD)	$\sigma_{m33}^{(A)}$	SM33A
PINF(11,K,NLD)	$\sigma_{m33}^{(B)}$	SM33B
PINF(12,K,NLD)	σ_{f11}	SF11
PINF(13,K,NLD)	$\sigma_{f22}^{(B)}$	SF22B
PINF(14,K,NLD)	$\sigma_{f33}^{(B)}$	SF33B
PINF(15,K,NLD)	σ_{f12}	SF12
PINF(16,K,NLD)	σ_{f13}	SF13
PINF(17,K,NLD)	$\sigma_{f23}^{(B)}$	SF23B

The dimension K varies from 1 to NMS, where NMS is the number of material systems. NLD varies from 1 to 7. The expression NLD = 1 to 5 refers to unit applied stresses in 11, 22, 12, 13, and 23, respectively. The expression NLD = 6 corresponds to unit temperature loading, and the expression NLD = 7 corresponds to unit moisture loading.

The microstress influence coefficients are computed for secondary composites and optionally computed for intraply hybrid composites. These are stored in the matrix SINF.

Subroutines AMAXF, AMINF, LOGO, and LOGO2.—These subroutines perform several auxiliary duties. AMAXF finds the maximum value of a one-dimensional array and its location. AMINF finds the minimum value of a one-dimensional array and its location. These two subroutines are utilized by MSCBFL and NUDIFS in conjunction with searching for failure loads and the probable locations of delamination. LOGO is a subroutine to generate the ICAN emblem for the output. The description of the material and the structural coordinate system by appropriate figures is generated by the subroutine LOGO2.

Subroutine INHYD.—This subroutine generates the composite ply properties, necessary for the laminate response analysis. The inputs to this routine are the constituent properties which are supplied in the appropriate format by the subroutines IDGED and BANKRD. INHYD calls the subroutines FIBMT, COMPP, and HTM to perform the micromechanics analysis, including the analysis of hygrothermal effects. The ply properties are stored in the array PROPS, which is accessed by the main program through the labeled common block PBANK. INHYD is called once for each different material system by the main program. The outputs of INHYD show the properties of the fiber, matrix, and composite.

The fiber and matrix properties for the primary composite are read in from the input provided by IDGER. These are stored in arrays PF and PM. Similarly, the arrays SF and SM are used to store the properties of secondary composite constituents if the composite is of the hybrid type. The program then checks for temperature and moisture. The properties of the matrix are updated for the presence of temperature and moisture. The following are the equations programmed to account for the hygrothermal property degradation:

The wet glass transition temperature is computed from

$$T_{gwr} = (0.005M_\ell^2 - .1M_\ell + 1)T_{gdr}$$

where T_{gwr} is the wet glass transition temperature, T_{gdr} is the dry glass transition temperature for the resin matrix, and M_ℓ is the percentage of moisture by weight.

The reduction factors X_{mp} and X_{tp} are computed from

$$X_{mp} = \sqrt{(T_{gwr} - T_u)/(T_{gdr} - T_o)}$$

$$X_{tp} = 1/X_{mp}$$

where T_o is the reference temperature (70 °F), and T_u is the use temperature.

The moduli and strengths of the matrix are multiplied by X_{mp} to obtain the new properties for the matrix. The density is given by

$$\rho_{mw} = \rho_m + 3\rho_m k_m M_\ell / 100$$

The thermal properties, such as heat capacity, thermal expansion coefficient, and thermal conductivity are multiplied by the second factor X_{tp} to account for the hygrothermal conditioning.

After the property arrays PF, PM, SF, and SM are properly filled, the program chooses either FIBMT or HTM subroutines to perform micromechanics. The subroutine HTM is chosen if temperature/moisture effects are to be taken into consideration. Otherwise, FIBMT is chosen for dry room temperature property computations. The outputs from these routines are primary and secondary composite ply properties. They are stored in the arrays P and S, respectively. These properties are made common to subroutine COMPP through the common blocks ILAB1 and ILAB3. The subroutine COMPP is called by INHYD for hybrid composites to compute the hybrid composite ply properties. These properties are stored in the array H. One of the arrays P, S, or H are passed to ICAN via common block PBANK and the array PROPS. For example, if the ply is made of 100 percent primary composite only, the array PROPS is assigned to have the same entries as P, etc.

The subroutine INHYD also calls FLEXX, which performs a flexural strength analysis. However, these are only for additional information and are not used by ICAN at the present time.

Subroutine FIBMT (C, F, M, VF, VM, VP, KV, IFLAG).—This subroutine generates properties of a ply by using the constituent properties which are supplied from the subroutine INHYD. The constituent properties are stored in the arrays F and M; F contains the fiber properties, and M contains the matrix properties. The composite properties are stored in the array C, which is returned to INHYD. The theory behind the programmed equations is discussed in reference 13. The following is a description of each entry in the arrays C, F, and M, with the corresponding algebraic notation:

Composite Properties Array C(I)

Entry	Description	Notation
C(1)	elastic moduli	$E_{\ell 11}$
C(2)	elastic moduli	$E_{\ell 22}$
C(3)	elastic moduli	$E_{\ell 33}$
C(4)	shear moduli	$G_{\ell 12}$
C(5)	shear moduli	$G_{\ell 23}$
C(6)	shear moduli	$G_{\ell 13}$
C(7)	Poisson's ratio	$\nu_{\ell 12}$
C(8)	Poisson's Ratio	$\nu_{\ell 23}$
C(9)	Poisson's Ratio	$\nu_{\ell 13}$
C(10)	thermal expansion coefficient	$\alpha_{\ell 11}$
C(11)	thermal expansion coefficient	$\alpha_{\ell 22}$
C(12)	thermal expansion coefficient	$\alpha_{\ell 33}$
C(13)	density	ρ_ℓ
C(14)	heat capacity	C_ℓ
C(15)	heat conductivity	$K_{\ell 11}$
C(16)	heat conductivity	$K_{\ell 22}$
C(17)	heat conductivity	$K_{\ell 33}$
C(18)	strength	$S_{\ell 11T}$
C(19)	strength	$S_{\ell 11C}$
C(20)	strength	$S_{\ell 22T}$
C(21)	strength	$S_{\ell 22C}$
C(22)	strength	$S_{\ell 12}$
C(23)	moisture diffusivity	$D_{\ell 11}$
C(24)	moisture diffusivity	$D_{\ell 22}$
C(25)	moisture diffusivity	$D_{\ell 33}$
C(26)	moisture expansion coefficient	$\beta_{\ell 11}$
C(27)	moisture expansion coefficient	$\beta_{\ell 22}$

C(28)	moisture expansion coefficient	$\beta_{\ell 33}$
C(29)	flexural moduli	$E_{\ell 11}$
C(30)	flexural moduli	$E_{\ell 22}$
C(31)	strengths (flexural)	$S_{\ell 23}$
C(32)	strengths (flexural)	$S_{\ell 11F}$
C(33)	strengths (flexural)	$S_{\ell 22F}$
C(34)	strengths (flexural)	$S_{\ell 12}$
C(35)	ply thickness	t_ℓ
C(36)	interply thickness	δ_ℓ
C(37)	interfiber spacing	δ_s

Fiber Properties Array

Entry	Description	Notation
F(1)	elastic moduli	E_{f11}
F(2)	elastic moduli	E_{f22}
F(3)	shear moduli	G_{f12}
F(4)	shear moduli	G_{f22}
F(5)	Poisson's ratio	ν_{f12}
F(6)	Poisson's ratio	ν_{f23}
F(7)	thermal expansion coefficient	α_{f11}
F(8)	thermal expansion coefficient	α_{f22}
F(9)	density	ρ_f
F(10)	number of fibers per end	N_f
F(11)	fiber diameter	d_f
F(12)	heat capacity	C_f
F(13)	heat conductivity	K_{f11}
F(14)	heat conductivity	K_{f22}
F(15)	heat conductivity	K_{f33}
F(16)	strength	S_{fT}
F(17)	strength	S_{fC}

Matrix Properties Array

Entry	Description	Notation
M(1)	elastic modulus	E_m
M(2)	shear modulus	G_m
M(3)	Poisson's ratio	ν_m
M(4)	thermal expansion coefficient	α_m
M(5)	density	ρ_m
M(6)	heat capacity	C_m
M(7)	heat conductivity	K_m
M(8)	strength	S_{mT}
M(9)	strength	S_{mC}
M(10)	strength	S_{mS}
M(11)	moisture coefficient	β_m
M(12)	diffusivity	D_m

The following are the programmed equations for the entries in array C:

Normal moduli:

$$E_{\ell 11} = k_f E_{f11} + k_m E_m$$

$$E_{\ell 22} = \frac{E_m}{1 - \sqrt{k_f}(1 - E_m / E_{f22})}$$

$$E_{\ell 33} = E_{\ell 22}$$

Shear moduli:

$$G_{\ell 12} = \frac{G_m}{1 - \sqrt{k_f}\left(1 - \frac{G_m}{G_{f12}}\right)}$$

$$G_{\ell 13} = G_{\ell 12}$$

$$G_{\ell 23} = \frac{G_m}{1 - k_f\left(1 - \frac{G_m}{G_{f23}}\right)}$$

Poisson's Ratio:

$$\nu_{\ell 12} = \nu_m + k_f(\nu_{f12} - \nu_m)$$

$$\nu_{\ell 13} = \nu_{\ell 12}$$

$$\nu_{\ell 23} = k_f \nu_{f23} + k_m\left(2\nu_m - \frac{\nu_{\ell 12}}{E_{\ell 11}} E_{\ell 22}\right)$$

Coefficients of thermal expansion:

$$\alpha_{\ell 11} = \frac{\alpha_{f11} + k_m[(\alpha_m E_m / E_{f11}) - \alpha_{f11}]}{1 + k_m\left(\frac{E_m}{E_{f11}} - 1\right)}$$

$$\alpha_{\ell 22} = \alpha_m(1-\sqrt{k_f}) \left[\frac{1 + k_f \nu_m E_{f11}}{E_{f11} + k_m\left(E_m - E_{f11}\right)} \right] + \alpha_{f22} k_f$$

$$\alpha_{33} = \alpha_{\ell 22}$$

Density:

$$\rho_\ell = \rho_f k_f + \rho_m k_m$$

Heat capacity:

$$C_\ell = \frac{(k_f C_f \rho_f + k_m C_m \rho_m)}{\rho_\ell}$$

Heat conductivities:

$$K_{\ell 11} = k_f K_{f11} + k_m K_m$$

$$K_{\ell 22} = (1-\sqrt{k_f})\, K_m + \frac{\sqrt{k_f}}{1-\sqrt{k_f}\left(1 - \frac{K_m}{K_{f22}}\right)} K_m$$

$$K_{\ell 33} = K_{\ell 22}$$

In the preceding equations, K_m should be replaced by

$$K_m \rightarrow (1-\sqrt{k_\nu})K_m + \frac{K_m\sqrt{k_\nu}}{1-\sqrt{k_\nu}\left(1 - \frac{K_m}{K_\nu}\right)}$$

if there are voids. The quantity K_ν is the void conductivity.

Strengths:

$$S_{\ell 11T} = S_{fT}(k_f + k_m E_m / E_{f11})$$

The longitudinal compressive strength is computed based on three different criteria, rule of mixtures, fiber microbuckling, and delamination. The minimum of the three estimates is returned as $S_{\ell 11C}$. The equations for the three cases are

$S_{\ell 11C}$ (rule of mixtures) $= S_{fc}(k_f + k_m E_m / E_{f11})$

S_{11C} (delamination) $= (13 S_{\ell 12} + S_{mc})$

$$S_{\ell 11C} \text{ (fiber microbuckling)} = \frac{F_2 G_m}{1 - k_f\left(1 - \frac{G_m}{G_{f12}}\right)}$$

The transverse strengths are calculated from

$S_{\ell 22T} = S_{mT}$(FACT/DENOM)

$S_{\ell 22C} = S_{mc}$/DENOM

$$S_{\ell 12} = \frac{[(F_1 - 1 + G_m/G_{f12})F_2 G_{\ell 12} S_{ms}]}{G_m F_1} \text{FACT}$$

where F_1 and F_2 are defined by the equations:

$$F_1 = \sqrt{\frac{\pi}{4k_f}}$$

$$F_2 = 1 - \sqrt{\frac{4k_v}{\pi k_m}}$$

The variable DENOM is a Fortran variable given by

$$\text{DENOM} = \left[1 - \sqrt{k_f}\left(1 - \frac{E_m}{E_{f22}}\right)\right]\sqrt{1 + \varphi(\varphi - 1) + \frac{1}{3}(\varphi - 1)^2}$$

where φ is given by

$$\varphi = \frac{F_1 - \dfrac{E_m}{E_{f22}\left[1 - \sqrt{k_f}\left(1 - \dfrac{E_m}{E_{f22}}\right)\right]}}{F_1 - 1}$$

The Fortran variable FACT takes the value k_m if IFLAG is unity. Otherwise FACT takes the value unity. This variable is introduced to correlate the strengths of HMS and Kevlar fiber composites with the experimentally observed values. The main program INHYD checks for these fibers and assigns the appropriate values for IFLAG. IFLAG is set at zero for other fibers.

Moisture diffusivities:

$$D_{\ell 11} = k_m D_m$$

$$D_{\ell 22} = (1 - \sqrt{k_f}) D_m$$

$$D_{\ell 33} = D_{\ell 22}$$

Moisture expansion coefficients:

$$\beta_{\ell 11} = \beta_m k_m E_m / E_{\ell 11}$$

$$\beta_{\ell 22} = \beta_m (1 - \sqrt{k_f})(1 + k_f \nu_m E_{f11} / E_{\ell 11})$$

$$\beta_{\ell 33} = \beta_{\ell 22}$$

Flexural moduli ($E_{\ell 11F}$, $E_{\ell 22F}$):

$$E_{\ell 11F} = E_{\ell 11}$$

$$E_{\ell 22F} = E_{\ell 22}$$

Flexural Strengths:

$$S_{\ell 23F} = \frac{\left(F_1 - 1 + \frac{G_m}{G_{f23}}\right) F_2 G_{\ell 23} S_{ms}}{G_m F_1}$$

$$S_{\ell 12F} = 1.5 S_{\ell 12}$$

Ply thickness: A default value of 0.005 is set for t_ℓ. This is overridden by the user specified value in the ICAN main program.

Interply thickness and interfiber spacing:

$$\delta_\ell = \left(\sqrt{\frac{\pi}{k_f}} - 2\right) \frac{d_f}{2}$$

$$\delta_f = \delta_\ell$$

Subroutine HTM (C, F, M, VF, VM, VV, IFLAG).—This subroutine generates the hygrothermomechanical properties based on the theory proposed in reference 15. The subroutine is called only if nontrivial entries for the use temperature and the moisture content ($T_u \neq 70$ °F or nonzero moisture content) are present. The equations programmed are mostly those discussed in the subroutine FIBMT description. Therefore, only the equations which are different are mentioned here.

Moisture expansion coefficients:

$$\beta_{\ell 22} = (1-\sqrt{k_f})\beta_m \left[1 + \frac{\sqrt{k_f}(1-\sqrt{k_f})E_m}{\sqrt{k_f}E_{\ell 22} + (1-\sqrt{k_f})E_m}\right]$$

$$\beta_{\ell 33} = \beta_{\ell 22}$$

Strengths:

$$S_{\ell 22T} = \left(\frac{S_{mT}}{E_m}\right) \frac{E_{\ell 22}\left(1-\sqrt{\frac{4k_\nu}{\pi k_m}}\right)(1-\sqrt{k_f})}{1-\left(\sqrt{k_f}E_{\ell 22}/E_{f22}\right)} \text{FACT}$$

$$S_{\ell 22C} = \left(\frac{S_{mC}}{E_m}\right) \frac{E_{\ell 22}\left(1-\sqrt{\frac{4k_\nu}{\pi k_m}}\right)(1-\sqrt{k_f})}{1-\left(\sqrt{k_f}E_{\ell 22}/E_{f22}\right)} \text{FACT}$$

$$S_{\ell 12} = \left(\frac{S_{mS}}{G_m}\right) G_{\ell 12} \frac{\left(1-\sqrt{\frac{4k_\nu}{\pi k_m}}\right)(1-\sqrt{k_f})}{1-\left(\sqrt{k_f}G_{\ell 12}/G_{f12}\right)} \text{FACT}$$

$$S_{\ell 23F} = \left(\frac{S_{mS}}{G_m}\right) \frac{G_{\ell 23}\left(1-\sqrt{\frac{4k_\nu}{\pi k_m}}\right)(1-\sqrt{k_f})}{1-\left(\sqrt{k_f}G_{\ell 23}/G_{f23}\right)}$$

$$S_{\ell 12F} = 1.5 S_{\ell 12}$$

In the preceding equations, FACT is a Fortran variable which is given by

$$\text{FACT} = \delta_s/\delta_f$$

for Kevlar and HMS fibers. For all other fibers FACT = 1.

Subroutine FLEXX (C).—The entries C(32) and C(33) of the ply property array C are generated in this subroutine. They are, respectively, the longitudinal flexural strength and the transverse flexural strength. The longitudinal flexural strength is given by

$$S_{\ell 1F} = \frac{2.5 S_{\ell 1T}}{\left(1 + \frac{S_{\ell 1T}}{S_{\ell 1C}}\right)}$$

The transverse flexural strength is given by

$$S_{\ell 2F} = \frac{2.5 S_{\ell 2T}}{\left(1 + \frac{S_{\ell 2T}}{S_{\ell 2C}}\right)}$$

Subroutine COMPP (IPFLAG, ISFLAG).—This subroutine is called by INHYD to generate the properties of a hybrid ply. The equations are based on the theory proposed in reference 13. The properties are stored in the array H. The entries are, however, the same as those of array C given in the description for subroutine FIBMT. The inputs to this routine are the primary composite properties array P, the secondary composites property array S, and the percentage of the secondary composite k_{sc}. The equations are the following:

Elastic normal moduli:

$$E_{\ell 1}(\mathrm{H}) = E_{\ell 1}(\mathrm{P}) + [E_{\ell 1}(\mathrm{S}) - E_{\ell 1}(\mathrm{P})]k_{sc}$$

$$E_{\ell 2}(\mathrm{H}) = \frac{E_{\ell 2}(\mathrm{P})}{1 + k_{sc}[E_{\ell 2}(\mathrm{P})/E_{\ell 2}(\mathrm{S}) - 1]}$$

$$E_{\ell 3}(\mathrm{H}) = E_{\ell 3}(\mathrm{P}) + [E_{\ell 3}(\mathrm{S}) - E_{\ell 3}(\mathrm{P})]k_{sc}$$

Shear moduli:

$$G_{\ell 23}(\mathrm{H}) = \frac{G_{\ell 23}(\mathrm{P})}{1 - k_{sc}\left(1 - \frac{G_{\ell 23}(\mathrm{P})}{G_{\ell 23}(\mathrm{S})}\right)}$$

$$G_{\ell 12}(\mathrm{H}) = \frac{G_{\ell 12}(\mathrm{P})}{1 - k_{sc}\left(1 - \frac{G_{\ell 12}(\mathrm{P})}{G_{\ell 12}(\mathrm{P})}\right)}$$

$$G_{\ell 13}(\mathrm{H}) = G_{\ell 13}(\mathrm{P}) + k_{sc}[\mathrm{G}_{\ell 13}(\mathrm{S}) - G_{\ell 13}(\mathrm{P})]$$

Poisson's ratios:

$$\nu_{\ell 12}(\mathrm{H}) = \nu_{\ell 12}(\mathrm{P}) + k_{sc}[\nu_{\ell 12}(\mathrm{S}) - \nu_{\ell 12}(\mathrm{P})]$$

$$\nu_{\ell 13}(\mathrm{H}) = \nu_{\ell 12}(\mathrm{P}) + \frac{k_{sc}[\nu_{\ell 12}(\mathrm{P}) - \nu_{\ell 12}(\mathrm{S})]}{(1-k_{sc})[E_{\ell 33}(\mathrm{P})/E_{\ell 33}(\mathrm{S})] - k_{sc}}$$

$$\nu_{\ell 23}(\mathrm{H}) = \nu_{\ell 23}(\mathrm{P}) + k_{sc}[\nu_{\ell 23}(\mathrm{S}) - \nu_{\ell 23}(\mathrm{S})]$$

Coefficients of thermal expansion:

$$\alpha_{\ell 11}(\mathrm{H}) = \frac{\alpha_{\ell 11}(\mathrm{P}) + k_{sc}\{[\alpha_{\ell 11}(\mathrm{S})E_{\ell 11}(\mathrm{S})/E_{\ell 11}(\mathrm{P})] - \alpha_{\ell 11}(\mathrm{P})\}}{1 + k_{sc}\left(\dfrac{E_{\ell 11}(\mathrm{S})}{E_{\ell 11}(\mathrm{P})} - 1\right)}$$

$$\alpha_{\ell 33}(\mathrm{H}) = \frac{1}{E_{\ell 33}(\mathrm{H})}\left\{-\nu_{\ell 13}(\mathrm{H})E_{\ell 33}(\mathrm{H})\alpha_{\ell 11}(\mathrm{H}) + (1-k_{sc})E_{\ell 33}(\mathrm{P})\left[\alpha_{\ell 22}(\mathrm{P}) + \nu_{\ell 13}(\mathrm{P})\alpha_{\ell 11}(\mathrm{P})\right]\right.$$
$$\left. + k_{sc}E_{\ell 33}(\mathrm{S})\left[\alpha_{\ell 22}(\mathrm{S}) + \nu_{\ell 13}(\mathrm{S})\alpha_{\ell 11}(\mathrm{S})\right]\right\}$$

$$\alpha_{\ell 22}(\mathrm{H}) = (1-k_{sc})\left\{\alpha_{\ell 22}(\mathrm{S})\left[1 + \nu_{\ell 23}(\mathrm{P})\right] + \nu_{\ell 12}(\mathrm{P})\alpha_{\ell 11}\right\}$$
$$+ k_{sc}\left\{\alpha_{\ell 22}(\mathrm{S})\left[1 + \nu_{\ell 23}(\mathrm{S})\right] + \nu_{\ell 12}(\mathrm{S})\alpha_{\ell 11}(\mathrm{S})\right\}$$
$$- \nu_{\ell 12}(\mathrm{H})\alpha_{\ell 11}(\mathrm{H}) - \nu_{\ell 23}(\mathrm{H})\alpha_{\ell 33}(\mathrm{H})$$

Density:

$$\rho_{\ell}(\mathrm{H}) = (1-k_{sc})\,\rho_{\ell}(\mathrm{P}) + k_{sc}\rho_{\ell}(\mathrm{S})$$

Heat capacity:

$$C_{\ell}(\mathrm{H}) = \left\{(1-k_{sc})[C_f(\mathrm{P})k_f(\mathrm{P})\rho_f(\mathrm{P}) + C_m(\mathrm{P})k_m(\mathrm{P})\rho_m(\mathrm{P})]\right.$$
$$+ k_{sc}[C_f(\mathrm{S})k_f(\mathrm{S})\rho_f(\mathrm{S}) + C_m(\mathrm{S})k_m(\mathrm{S})\rho_m(\mathrm{S})]$$
$$\left. + [k_f(\mathrm{P})k_{\nu}(\mathrm{P}) + k_{sc}k_{\nu}(\mathrm{S})]M\rho_{mst}C_{mst}\right\} / \rho_{\ell}(\mathrm{H})$$

where ρ_{mst} and C_{mst} are the moisture density and heat capacity, respectively.

Heat conductivities:

$$K_{\ell 11}(\mathrm{H}) = (1 - k_{sc})[k_f(\mathrm{P})K_{\ell 11}(\mathrm{P}) + k_m(\mathrm{P})K_m(\mathrm{P})] + k_{sc}[k_f(\mathrm{S})K_{\ell 11}(\mathrm{S}) + k_m(\mathrm{S})K_m(\mathrm{S})]$$

$$K_{\ell 22}(\mathrm{P}) = \frac{(1 - \sqrt{k_f(\mathrm{P})}K_m(\mathrm{P}) + \sqrt{k_f(\mathrm{P})}K_m(\mathrm{P})}{1 - \sqrt{k_f(\mathrm{P})}[1 - K_m(\mathrm{P})/K_{l22}(\mathrm{P})]}$$

$$K_{\ell 22}(\mathrm{S}) = \frac{(1 - \sqrt{k_f(\mathrm{S})}K_m(\mathrm{S}) + \sqrt{k_f(\mathrm{S})}K_m(\mathrm{S})}{1 - \sqrt{k_f(\mathrm{S})}[1 - K_m(\mathrm{S})/K_{l22}(\mathrm{S})]}$$

$$K_{\ell 22}(\mathrm{H}) = \frac{K_{\ell 22}(\mathrm{P})}{1 - k_{sc}[1 - K_{\ell 22}(\mathrm{S})/K_{\ell 22}(\mathrm{P})]}$$

$$K_{\ell 33}(\mathrm{H}) = K_{\ell 22}(\mathrm{H})$$

The void conductivity K_ν with moisture content M is given by $K_\nu = \mathrm{M}K_{\mathrm{mst}}$. If there are voids in the primary composite, $K_{\mathrm{m}}(\mathrm{P})$ in the preceding equations for heat conductivities is replaced by

$$K_m(\mathrm{P}) = [1 - \sqrt{k_\nu(\mathrm{P})}]K_m(\mathrm{P}) + \frac{\sqrt{k_\nu(\mathrm{P})}K_m(\mathrm{P})}{[1 - \sqrt{k_\nu(\mathrm{P})}][1 - K_m(\mathrm{P})/K_\nu]}$$

Similarly, for the secondary composite, $K_m(\mathrm{S})$ is replaced by

$$K_m(\mathrm{S}) = [1 - \sqrt{k_\nu(\mathrm{S})}]K_m(\mathrm{S}) + \frac{\sqrt{k_\nu(\mathrm{S})}K_m(\mathrm{S})}{[1 - \sqrt{k_\nu(\mathrm{S})}][1 - K_m(\mathrm{S})/K_\nu]}$$

Strengths.—The longitudinal strengths are based on the rule of mixtures:

$$S_{\ell 11T}(\mathrm{H}) = S_{\ell 11T}(\mathrm{P})(1 - k_{sc}) + S_{\ell 11T}(\mathrm{S})k_{sc}$$

$$S_{\ell 11C}(\mathrm{H}) = S_{\ell 11C}(\mathrm{P})(1 - k_{sc}) + S_{\ell 11C}(\mathrm{S})k_{sc}$$

The following are a few intermediate variables defined for convenience in the evaluation of transverse strengths:

$$Q_p = 1 - 2\sqrt{k_\nu(\mathrm{P})/\pi}\,\left[1 - 2\sqrt{k_f(\mathrm{P})/\pi}\right]$$

$$Q_s = 1 - 2\sqrt{k_\nu(\mathrm{S})/\pi}\,\left[1 - 2\sqrt{k_f(\mathrm{S})/\pi}\right]$$

$S_{mC} = \min[S_{mC}(\mathrm{P}) \text{ and } S_{mC}(\mathrm{S})]$

$S_{mT} = \min[S_{mT}(\mathrm{P}) \text{ and } S_{mT}(\mathrm{S})]$

$S_{mS} = \min[S_{mS}(\mathrm{P}) \text{ and } S_{mS}(\mathrm{S})]$

FACT 1 = $k_m(\mathrm{P})$ (for HMS and Kevlar fibers)

FACT 2 = $k_m(\mathrm{S})$ (for HMS and Kevlar fibers)

FACT 1 = FACT 2 = 1 (for all other fibers)

$$S_{\ell 22}(\mathrm{P}) = \frac{(1-k_{sc})Q_p/E_{P22}(\mathrm{P})\left[1-\sqrt{\frac{k_f(\mathrm{P})}{\pi}}\left(1-\frac{E_m(\mathrm{P})}{E_{f22}(\mathrm{P})}\right)\right]}{1-\sqrt{k_f(\mathrm{P})}\left(1-\frac{E_m(\mathrm{P})}{E_{f22}(\mathrm{P})}\right)} S_m(\mathrm{P})$$

$$S_{\ell 22}(\mathrm{S}) = \frac{\frac{k_{sc}Q_s}{E_{\ell 22}(\mathrm{S})}\left[1-\sqrt{\frac{k_f(\mathrm{S})}{\pi}}\left(1-\frac{E_m(\mathrm{S})}{E_{f22}(\mathrm{S})}\right)\right]}{1-\sqrt{k_f(\mathrm{S})}\left(1-\frac{E_m(\mathrm{S})}{E_{f22}(\mathrm{S})}\right)} S_m(\mathrm{S})$$

$$\varphi_p = \frac{\sqrt{\frac{\pi}{4k_f(\mathrm{P})}} - \frac{E_m(\mathrm{P})}{\mathrm{E_{f22}(P)}\left[1-\sqrt{k_f(\mathrm{P})}\left(1-\frac{E_m(\mathrm{P})}{E_{f22}(\mathrm{P})}\right)\right]}}{\sqrt{\frac{\pi}{4k_f(\mathrm{P})}} - 1}$$

$$\varphi_s = \frac{\sqrt{\frac{\pi}{4k_f(\mathrm{S})}} - \frac{E_m(\mathrm{S})}{\mathrm{E_{f22}(S)}\left[1-\sqrt{k_f(\mathrm{S})}\left(1-\frac{E_m(\mathrm{S})}{E_{f22}(\mathrm{S})}\right)\right]}}{\sqrt{\frac{\pi}{4k_f(\mathrm{S})}} - 1}$$

$$\mathrm{DENOMP} = 1-\sqrt{k_f(\mathrm{P})}\left(1-\frac{E_m(\mathrm{P})}{E_{f22}(\mathrm{P})}\right)\sqrt{1+\varphi_p(\varphi_p-1)+\frac{1}{3}(\varphi_p-1)^2}$$

$$\mathrm{DENOMS} = 1-\sqrt{k_f(\mathrm{S})}\left(1-\frac{E_m(\mathrm{S})}{E_{f22}(\mathrm{S})}\right)\sqrt{1+\varphi_s(\varphi_s-1)+\frac{1}{3}(\varphi_s-1)^2}$$

The transverse and the shear strengths of hybrid composites are given by

$$S_{\ell 22T}(\mathrm{H}) = E\ell 22(\mathrm{H})\left[\frac{(1-k_{sc})\mathrm{FACT1}}{E_{\ell 22}(\mathrm{P})\mathrm{DENOMP}} + \frac{k_{sc}\mathrm{FACT2}}{E_{\ell 22}(\mathrm{S})\mathrm{DENOMS}}\right] S_{mT}$$

$$S_{\ell 22C}(\mathrm{H}) = E\ell 22(\mathrm{H})\left[\frac{(1-k_{sc})}{E_{\ell 22}(\mathrm{P})\mathrm{DENOMP}} + \frac{k_{sc}}{E_{\ell 22}(\mathrm{S})\mathrm{DENOMS}}\right] S_{mC}$$

$$S_{\ell 12}(\mathrm{H}) = \frac{2G_{\ell 12}}{\pi}\left\{\frac{\frac{(1-k_{sc})Q_p}{G_{\ell 12}(\mathrm{P})}\mathrm{FACT1}\left[1-\sqrt{\frac{k_f(\mathrm{P})}{\pi}}\left(1-\frac{G_m(\mathrm{P})}{G_{\ell 12}(\mathrm{P})}\right)\right]}{1-\sqrt{k_f(\mathrm{P})}\left(1-\frac{G_m(\mathrm{P})}{G_{\ell 12}(\mathrm{P})}\right)}\right.$$

$$\left.+\frac{\frac{k_{sc}Q_s}{G_{\ell 12}(\mathrm{S})}\mathrm{FACT2}\left[1-\sqrt{\frac{k_f(\mathrm{S})}{\pi}}\left(1-\frac{G_m(\mathrm{S})}{G_{\ell 12}(\mathrm{S})}\right)\right]}{1-\sqrt{k_f(\mathrm{S})}\left(1-\frac{G_m(\mathrm{S})}{G_{l12}(\mathrm{S})}\right)}\right\} S_{mS}$$

Moisture diffusivity:

$$D'_{\ell}(\mathrm{P}) = \frac{1-\sqrt{k_v(\mathrm{P})}+k_v(\mathrm{P})}{[1-\sqrt{k_f(\mathrm{P})}]D_{\ell}(\mathrm{P})}$$

$$D'_{\ell}(\mathrm{S}) = \frac{1-\sqrt{k_v(\mathrm{S})}+k_v(\mathrm{S})}{[1-\sqrt{k_f(\mathrm{S})}]D_{\ell}(\mathrm{S})}$$

$$D_{\ell 11}(\mathrm{H}) = (1-k_{sc})k_m(\mathrm{P})D'_{\ell}(\mathrm{P}) + k_{sc}k_m(\mathrm{S})D'_{\ell}(\mathrm{S})$$

$$D_{\ell 22}(\mathrm{H}) = (1-k_{sc})\left[1-2\sqrt{k_f(\mathrm{P})}\right]D'_{\ell}(\mathrm{P}) + k_{sc}\left[1-\sqrt{k_f(\mathrm{S})}\right]D'_{\ell}(\mathrm{S})$$

$$D_{\ell 33}(\mathrm{H}) = D_{\ell 22}(\mathrm{H})$$

Moisture expansion coefficients:

$$\beta_{\ell 11}(\mathrm{P}) = \frac{k_m(\mathrm{P})\beta_m(\mathrm{P})E_m(\mathrm{P})}{k_f(P)E_{f11}(\mathrm{P}) + k_m(\mathrm{P})E_m(\mathrm{P})}$$

$$\beta_{\ell 11}(\mathrm{S}) = \frac{k_m(\mathrm{S})\beta_m(\mathrm{S})E_m(\mathrm{S})}{k_f(S)E_{f11}(\mathrm{S}) + k_m(\mathrm{S})E_m(\mathrm{S})}$$

$$\beta_{\ell 22}(\mathrm{P}) = \beta_m(\mathrm{P})\left[1-\sqrt{k_f(\mathrm{P})}\right]\left\{1+\frac{k_f(\mathrm{P})k_m(\mathrm{P})E_{f11}(\mathrm{P})}{E_{f11}(\mathrm{P})+k_m(\mathrm{P})[E_m(\mathrm{P})-E_{f11}(\mathrm{P})]}\right\}$$

$$\beta_{\ell 22}(\mathrm{S}) = \beta_m(\mathrm{S})\left[1 - \sqrt{k_f(\mathrm{S})}\right]\left\{1 + \frac{k_f(\mathrm{S})k_m(\mathrm{S})E_{f11}(\mathrm{S})}{E_{f11}(\mathrm{S}) + k_m(\mathrm{S})\left[E_m(\mathrm{S}) - E_{f11}(\mathrm{S})\right]}\right\}$$

$$\beta_{\ell 11}(\mathrm{H}) = \frac{\left[(1-k_{sc})k_m(\mathrm{P})\beta_m(\mathrm{P})E_m(\mathrm{P}) + k_{sc}k_m(\mathrm{S})\beta_m(\mathrm{S})E_m(\mathrm{S})\right]}{E_{\ell 11}(\mathrm{H})}$$

$$\beta_{\ell 33}(\mathrm{H}) = \left\{-\nu_{\ell 13}(\mathrm{H})E_{\ell 33}(\mathrm{H})\beta_{\ell 11}(\mathrm{H}) + (1-k_{sc})E_{\ell 33}(\mathrm{P})[\beta_{\ell 22}(\mathrm{P}) + \nu_{\ell 13}(\mathrm{P})\beta_{\ell 11}(\mathrm{P})] + k_{sc}E_{\ell 33}(\mathrm{S})[\beta_{\ell 22}(\mathrm{S}) + \nu_{\ell 13}(\mathrm{S})\beta_{\ell 11}(\mathrm{S})]\right\} \Big/ E_{\ell 33}(\mathrm{H})$$

$$\nu_{\ell 12}(\mathrm{P}) = \nu_m(\mathrm{P}) + k_f(\mathrm{P})[\nu_{f12}(\mathrm{P}) - \nu_m(\mathrm{P})]$$

$$\nu_{\ell 12}(\mathrm{S}) = \nu_m(\mathrm{S}) + k_f(\mathrm{S})[\nu_{f12}(\mathrm{S}) - \nu_m(\mathrm{S})]$$

$$\nu_{\ell 32}(\mathrm{P}) = \nu_m(\mathrm{P}) + k_f(\mathrm{P})[\nu_{f23}(\mathrm{P}) - \nu_m(\mathrm{P})]$$

$$\nu_{\ell 32}(\mathrm{S}) = \nu_m(\mathrm{S}) + k_f(\mathrm{S})[\nu_{f23}(\mathrm{S}) - \nu_m(\mathrm{S})]$$

$$\beta_{\ell 22}(\mathrm{H}) = (1-k_{sc})[\beta_{\ell 22}(\mathrm{P})(1+\nu_{\ell 32}(\mathrm{P})) + \nu_{\ell 12}(\mathrm{P})\beta_{\ell 11}(\mathrm{P})] + k_{sc}[\beta_{\ell 22}(\mathrm{S})(1+\nu_{\ell 32}(\mathrm{S})) + \nu_{\ell 12}(\mathrm{S})\beta_{\ell 11}(\mathrm{S})] - \nu_{\ell 12}(\mathrm{H})\beta_{\ell 11}(\mathrm{H}) - \nu_{\ell 23}(\mathrm{H})\beta_{\ell 33}(\mathrm{H})$$

Flexural moduli:

$$E_{\ell 11F}(\mathrm{H}) = E_{\ell 11}(\mathrm{H})$$

$$E_{\ell 22F}(\mathrm{H}) = E_{\ell 22}(\mathrm{H})$$

Flexural strengths:

$$S_{\ell 23F}(\mathrm{H}) = \frac{2G_{\ell 23}(\mathrm{H})}{\pi}\left\{\frac{(1-k_{sc})\mathrm{Q_p}\left[1 - \sqrt{\frac{k_f(\mathrm{P})}{\pi}}\left(1 - \frac{G_m(\mathrm{P})}{G_{\ell 23}(\mathrm{P})}\right)\right]}{1 - \sqrt{k_f(\mathrm{P})}\left(1 - \frac{G_m(\mathrm{P})}{G_{\ell 23}(\mathrm{P})}\right)} + \frac{k_{sc}Q_s}{G_{\ell 23}(\mathrm{S})}\frac{\left[1 - \sqrt{\frac{k_f(\mathrm{S})}{\pi}}\left(1 - \frac{G_m(\mathrm{S})}{G_{\ell 23}(\mathrm{S})}\right)\right]}{1 - \sqrt{k_f(\mathrm{S})}\left(1 - \frac{G_m(\mathrm{S})}{G_{l23}(\mathrm{S})}\right)}\right\} S_m(\mathrm{S})$$

$$S_{\ell 12SB}(\mathrm{H}) = 1.5S_{\ell 12}(\mathrm{H})$$

Fiber volume ratio:

$$k_f(\mathrm{H}) = k_f(\mathrm{P}) + k_{sc}[k_f(\mathrm{S}) - k_f(\mathrm{P})]$$

Subroutines BANKRD and IDGER.—These two subroutines do preprocessing to generate compatible input data to the subroutine INHYD. The subroutine BANKRD is called first by the ICAN main program. The input to this routine is primarily the data supplied on the material card MATCRD by the user. These cards indicate the coded names for the fiber and matrix, the volume ratios of primary and secondary composites, and their respective fiber, and the matrix and void volume ratios. The subroutine BANKRD has its own data base containing the properties of fibers and matrices of commonly used materials. This data base is assigned to input unit 8. It is named FBMTDATA.BANK. The output of BANKRD are the arrays PFP, PFS, PMP, and PMS. The entries in PFP and PFS are the fiber properties of primary and secondary composites. The entries in PMP and PMS are the matrix properties of primary and secondary composites. These arrays are made common to the main program and the subroutine IDGER through the labeled common block MFBANK. The entries of PF and PM arrays are explained in the following list:

Fiber Property Arrays PFP and PFS

Entry	Description	Notation
1	not used	----
2	fiber density	ρ_f
3	normal moduli	E_{f11}
4	normal moduli	E_{f22}
5	Poisson's ratio	ν_{f12}
6	Poisson's ratio	ν_{f23}
7	shear moduli	G_{f12}
8	shear moduli	G_{f23}
9	thermal expansion coefficient	α_{f11}
10	thermal expansion coefficient	α_{f22}
11	heat conductivity	K_{f11}
12	heat conductivity	K_{f22}
13	heat capacity	C_f
14	strengths	S_{fT}
15	strengths	S_{fC}
16	not used	----
17	not used	----
18	not used	----
19	not used	----
20	number of fibers per end	N_f
21	fiber diameters	d_f

Matrix Property Arrays PMP and PMS

Entry	Description	Notation
1	not used	----
2	density	ρ_m
3	normal modulus	E_m
4	Poisson's ratio	ν_m
5	coefficient of thermal expansion	α_m
6	heat conductivity	K_m
7	heat capacity	C_m
8	tensile strength	S_{mT}
9	compressive strength	S_{mC}
10	shear strength	S_{mS}
11	allowable tensile strain	ϵ_{mT}
12	allowable compressive strain	ϵ_{mC}
13	allowable shear strain	ϵ_{mS}
14	allowable torsional strain	ϵ_{mTOR}
15	void conductivity	K_v
16	glass transition temperature	T_{gdr}

The coded names for the fiber and matrix are stored in the matrix CODES by the main program. The entries in CODES are explained as follows:

CODES(1,1,I)	coded name of primary fiber
CODES(1,2,I)	coded name of primary matrix
CODES(2,1,I)	coded name of secondary fiber
CODES(2,2,I)	coded name of secondary matrix

The subroutine IDGER takes the information generated by BANKRD and arranges it in a proper format for the subroutine INHYD. These data are transferred to input unit 7 prior to calling INHYD. These data are purged at the end of the program execution.

Data Base FBMTDATA.BANK.

The constituent properties data base is a unique feature of the computer code ICAN. Its primary aim is to reduce the burden on the user by preparing properly formatted data for the program. The user only needs to specify the coded names for the fiber and matrix. The format of the data is explained in this section so as to enable the user to introduce new contents or to modify existing entries as appropriate to his/her needs. Data for four fibers and three matrices are provided in the present package.

The fiber properties are arranged in five physical cards of 80 column length. The first card contains a four-character code name of a fiber in format A4. The second to the fifth cards start with a two-letter mnemonic to indicate the type of properties that follow. The format on any of these cards is A4, 7E10.3, except for the second card. The second card is in the format A3, I6, 7E10.3. The mnemonics FP, FE, FT, and FS stand for fiber physical, elastic, thermal, and strength-related properties, respectively. The entries on these cards are explained as follows:

card 1 four character coded name for fiber
card 2 FP; N_f, d_f, ρ_f
card 3 FE; E_{f11}, E_{f22}, γ_{f12}, γ_{f23}, G_{f12}, G_{f23}
card 4 FT; α_{f11}, α_{f22}, K_{f11}, K_{f22}, C_f
card 5 FS; S_{fT}, S_{fC} (The remaining entries are open for future modifications.)

The matrix properties are arranged next after the line OVER END OF FIBER PROPERTIES. The properties have essentially the same format as those for fiber property cards. There are, however, six physical cards for each matrix material. The mnemonics used are MP, ME, MT, MS, and MV. They stand for matrix physical, elastic, thermal, strength-related, and miscellaneous properties, respectively. The format for the first card is A4, and the format for the rest of the cards is A3, 7E10.3. The entries in each card are as follows:

card 1 four character coded name for matrix
card 2 MP; ρ_m
card 3 ME; E_m, ν_m, α_m
card 4 MT; K_m, C_m
card 5 MS; S_{mT}, S_{mC}, S_{mS}, ϵ_{mT}, ϵ_{mC}, ϵ_{mS}, ϵ_{mTOR}
card 6 MV; K_v, T_{gdr}

The data base presently contains properties for T-300 (T300), AS graphite (AS--), S-Glass (SGLA), and HMS (HMSF) fibers. The available matrix materials are high-modulus, high-strength (HMHS), intermediate-modulus, high-strength (IMHS), and intermediate-modulus, low-strength (IMLS) matrices, which are epoxy-type resins. The complete list of properties is shown in appendix C.

Lewis Research Center
National Aeronautics and Space Administration
Cleveland, Ohio, October 11, 1985

Appendix A
List of Code Identifiers

Engineering symbol	Fortran symbol code	Comment
A_{cx}	ACX	composite axial stiffness; generated in subroutine GPCFD2
A^R_{cx}	RAC	reduced axial stiffness; computed in subroutine GPCFD2
BIDE	Boolean	true if interply effects are included; input
C_{cx}	CPC	composite coupling stiffness; generated in subroutine GPCFD2
C_{e1}	RESF	string with force variables in BLOCK DATA
C_{e2}	DISP	string with displacement variables in BLOCK DATA
COMSAT	Boolean	true if COMSA is executed; input
CSANB	Boolean	true if membrane and bending symmetry exists; input
D_{cx}	FTC	composite flexural rigidities; generated in subroutine GPCFD2
D^R_{cx}	RDC	reduced bending rigidities; computed in subroutine GPCFD2
D_f	DIAF	filament equivalent diameter; input
D_v	DISV, DISVI	displacement vectors; DISVI is either read in main program, or is generated in subroutine COMSA
E_f, E_{cf}	ECF	filament elastic constants; input
$E_{f11,\ell 11,m11}$	EF11,EL11,EM11	filament, ply, and matrix normal moduli; filament and matrix moduli input
$G_{f12,\ell 12,m11}$	EF12,EL12,EM12	filament, ply, and matrix shear moduli; filament and matrix shear moduli input
E_ℓ,$E_{c\ell}$	ECL	ply elastic constants; generated in subroutine INHYD
E_m,E_{cm}	ECM	matrix elastic constants; generated in subroutine INHYD
H_j	PL(9,I)	interply distortion energy coefficient; generated in main program
H_{kc}	CHK	array of constituent heat conductivities; input
h_c	HHC	composite heat capacity stored in PC(18) and PC(54)
i,j	I,J	index; generally ply or interply
$K_{cxx,cyy,cxy}$	HK11,22,33	composite two-dimensional heat conductivities in PC(51) to PC(53)
$K_{c11,c22,c33}$	HK11,22,33	composite three-dimensional heat conductivities along the material axes in, PC(15) to PC(17)
$K_{f,v}$	KF,V	apparent fiber and void volume ratios; input
$K_{f11,\ell 11,m11}$	CHK	see H_{kc}
$K_{1xx,1yy,1xy}$	XK1,XK2,XK3	stress concentration factors generated in STRCNF
$k_{f,m}$	KFB,MB	actual fiber and matrix volume ratios
$k_{f\ell,v\ell}$	KFL,VL	ply apparent fiber and void volume ratios
L_{sc}	LSC	array of limiting conditions; input
M_{cx}	MBS	applied moment; input
$M_{cT_\ell x}$	MSDT	thermal moments; generated in GPCFD2
$M_{cM_\ell x}$	MSDH	hygral moments; generated in GPCFD2
m	M	load condition index
N_{cx}	NBS	applied membrane loads; input
$N_{cM_\ell x}$	NSDH	hygral force; generated in GPCFD2
$N_{cT_\ell x}$	NSDT	thermal force; generated in GPCFD2
N_f	NFPE	number of filaments per end; input
N_ℓ	NL	number of plies; input

$N_{\ell c}$	NLC	number of load conditions; input
N_{ms}	NMS	number of material systems; input
N_{pc}	NPC	string PROPC length; input
$N_{p\ell}$	NPL	string PROP length; input
NONUDF	Boolean	T (true) if Poisson's ratio difference chart is to be suppressed
P_c	PC	composite properties array; generated in GACD3 and GPCFD2
P_{cp}	PROPC	string PROPC; composite property identifiers in GDCFD2
P_ℓ	PL	ply property array; portions generated in all parts of the program
$P_{\ell p}$	PROP	string PROP; ply properties identifiers in main program
$Q_{f,i,p,r,s}$	QF,I,P,R,S	indices to print out string PROP
R	R	transformation matrix; GACD3, GPCFD2, and COMSA
RINDV	Boolean	T (true) if displacements are read in; input
$S_{\ell 11T}$,etc.	PL(51) to PL(59,I)	ply limit stresses; generated in GLLSC
t_ℓ	TL	ply thickness; input
w_{cb}	w_{xx}	composite local curvatures relative to the structural axes
α_c	CTE	composite coefficient of thermal expansion; three-dimensional in PC(12) to PC(14), two-dimensional in PC(48) to PC(50)
$\alpha_{f,\ell,m}$	VAF,AL,AM	filament, ply, and matrix thermal coefficients of expansion; input
$\beta_{e,\nu e}$	VCF	correlation factors for ply thermoelastic properties and strain magnification factors; set to unity in COMSA
β_h	BTA	correlation factors for ply heat conductivity; set to unity in COMSA
β_s	BET	correlation factors for ply strength; set to unity in COMSA
δ_ℓ	PL(8,I)	interply layer thickness; generated in INHYD
ϵ_{csx}	UX	reference plane membrane strain; solved in terms of N_{cx} or input
ϵ_ℓ	EPS,PL(74) to PL(66,I)	ply strains; generated in COMSA
θ_{cs}	THCS	angle between composite material and structural axes; input
$\theta_{\ell i}$,$\theta_{\ell c}$	THLC	angle between ply material and composite axes; input
$\nu_{f12,\ \ell 12,\ m12}$	NUF12,L12,M12	filament, ply, and matrix Poisson's ratios; input
π	PIE	constant; input
$\rho_{f,m,\ell}$	RHOF,M,L	filament and matrix weight density; input and generated in FIBMT, HTM, and COMPP
$\sigma_f,\ \sigma_m$	SF, SM	microstresses in fibers and matrices generated in MCRSTR
ℓ_i	XPL,XSL,YPL,YSL	boundary zone decay length; generated in the main program and paired to EDGSTR
σ_ℓ	SIGL,PL(67) to PL(69,I)	ply stress; generated in COMSA

Appendix B
Sample Input/Output

Item 1

I C A N

```
**********************************************************************
**********************************************************************
**                                                                  **
**                                                                  **
**                                                                  **
**                                                                  **
**                                                                  **
**       SSSSSSSSSS     CCCCCCCCC      AAAAAAAA     NNN       NNN  **
**      SSSSSSSSSSSS   CCCCCCCCCCC    AAAAAAAAAA    NNNN      NNN  **
**          SSSS       CCC           AAA      AAA   NNNNN     NNN  **
**          SSSS       CCC           AAA      AAA   NNNNNN    NNN  **
**          SSSS       CCC           AAA      AAA   NNNNNN    NNN  **
**          SSSS       CCC           AAA      AAA   NNN NNN   NNN  **
**          SSSS       CCC           AAA      AAA   NNN NNN   NNN  **
**          SSSS       CCC           AAA      AAA   NNN NNN   NNN  **
**          SSSS       CCC           AAA      AAA   NNN  NNN  NNN  **
**          SSSS       CCC           AAAAAAAAAAAA   NNN  NNN  NNN  **
**          SSSS       CCC           AAAAAAAAAAAA   NNN  NNN  NNN  **
**          SSSS       CCC           AAA      AAA   NNN  NNN  NNN  **
**          SSSS       CCC           AAA      AAA   NNN   NNN NNN  **
**          SSSS       CCC           AAA      AAA   NNN   NNN NNN  **
**          SSSS       CCC           AAA      AAA   NNN   NNN NNN  **
**          SSSS       CCC           AAA      AAA   NNN    NNNNNN  **
**          SSSS       CCC           AAA      AAA   NNN    NNNNNN  **
**          SSSS       CCC           AAA      AAA   NNN     NNNNN  **
**      SSSSSSSSSSSS   CCCCCCCCCCC   AAA      AAA   NNN      NNNN  **
**       SSSSSSSSSS     CCCCCCCCC    AAA      AAA   NNN       NNN  **
**                                                                  **
**                                                                  **
**        INTEGRATED COMPOSITES ANALYZER      BY  P.L.N. MURTHY     **
**                                            NASA LERC.CLEVELAND   **
**                                            SEPTEMBER   1983      **
**                                                                  **
**                                                                  **
**                                                                  **
**********************************************************************
**********************************************************************
```

Item 2

I C A N: COORDINATE SYSTEMS

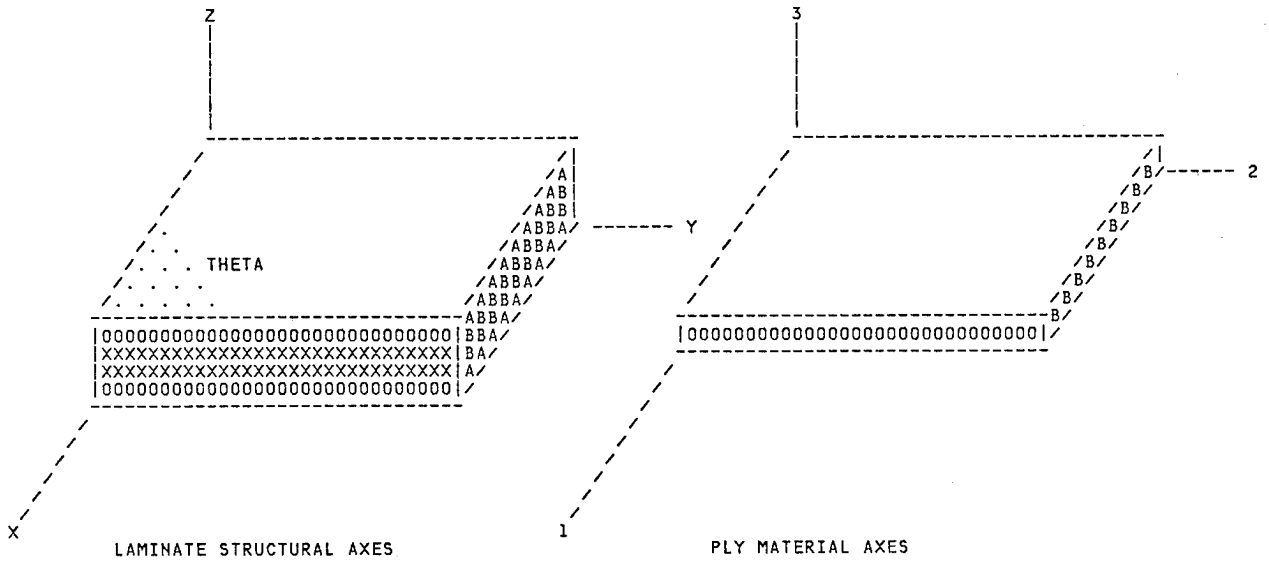

Item 3

```
                    I C A N
          I N P U T  D A T A  E C H O

 FOUR PLY SYMMETRIC LAMINATE. ICAN SAMPLE INPUT DATA.
   STDATA        4        1        2
      T                                          COMSAT
      F                                          CSANB
      F                                          BIDE
      F                                          RINDV
      T                                          NONUDF
      PLY       1        1   70.00    70.0        .0       0.0   .010
      PLY       2        2   70.00    70.0        .0      90.0   .005
      PLY       3        2   70.00    70.0        .0      90.0   .005
      PLY       4        1   70.00    70.0        .0       0.0   .010
   MATCRDAS--IMLS   .55      .02    AS--IMLS  0.0       .57      .03
   MATCRDSGLAHMHS   .55      .01    AS--IMHS  0.4       .57      .01
    PLOAD 1000.     0.0      0.0       0.0                NX,NY,NXY,THCS
    PLOAD  0.0      0.0      0.0                          MX,MY,MXY
    PLOAD  0.0      0.0                                   DMX/QX,DMY/QY,PRSS
```

Item 4

```
S U M M A R Y  O F  I N P U T  D A T A

FOUR PLY SYMMETRIC LAMINATE. ICAN SAMPLE INPUT DATA.


- - -      CASE   CONTROL   DECK       - - -
NUMBER OF LAYERS                NL  =    4
NUMBER OF LOADING CONDITIONS    NLC =    1
NUMBER OF MATERIAL SYSTEMS      NMS =    2

  COMSAT     CSANB     BIDE      RINDV     NONUDF
    T          F         F         F         T


- - -    LAMINATE   CONFIGURATION    - - -
-------------------------------------------------------------
    PLY   NO       MID     DELTAT   DELTAM   THETA    T-NESS
-------------------------------------------------------------
    PLY     1        1      0.000    0.0%     0.0      0.010
    PLY     2        2      0.000    0.0%    90.0      0.005
    PLY     3        2      0.000    0.0%    90.0      0.005
    PLY     4        1      0.000    0.0%     0.0      0.010
-------------------------------------------------------------


- - -    COMPOSITE MATERIAL SYSTEMS    - - -
-------------------------------------------------------------------------
 MATCRD   MID  PRIMARY   VFP     VVP  SECONDARY  VSC      VFS      VVS

 MATCRD    1   AS--IMLS  0.55    0.02 AS--IMLS   0.00     0.57     0.03
 MATCRD    2   SGLAHMHS  0.55    0.01 AS--IMHS   0.40     0.57     0.01
-------------------------------------------------------------------------


- - -    LOADING CONDITIONS    - - -
PRESCRIBED LOADS FOR THE LOAD CONDITION  1
INPLANE LOADS              NX        =    1000.0000 LB/IN
                           NY        =       0.0000 LB/IN
                           NXY       =       0.0000 LB/IN
BENDING LOADS              MX        =       0.0000 LB.IN/IN
                           MY        =       0.0000 LB.IN/IN
                           MXY       =       0.0000 LB.IN/IN
TRANSVERSE LOADS           DMX/QX    =       0.0000 LB/IN
                           DMY/QY    =       0.0000 LB/IN
TRANSVERSE PRESSURE        PU        =       0.0000 LB/SQ. IN.
TRANSVERSE PRESSURE        PL        =       0.0000 LB/SQ. IN.
```

Item 5(a)

--> CONSTITUENT PROPERTIES: ECHO FROM DATA BANK. <--

PRIMARY FIBER PROPERTIES; AS-- FIBER

1	ELASTIC MODULI	EFP1	0.3100E 08
2		EFP2	0.2000E 07
3	SHEAR MODULI	GFP12	0.2000E 07
4		GFP23	0.1000E 07
5	POISSON'S RATIO	NUFP12	0.2000E 00
6		NUFP23	0.2500E 00
7	THERM. EXP. COEF.	CTEFP1	-0.5500E-06
8		CTEFP2	0.5600E-05
9	DENSITY	RHOFP	0.6300E-01
10	NO. OF FIBERS/END	NFP	0.1000E 05
11	FIBER DIAMETER	DIFP	0.3000E-03
12	HEAT CAPACITY	CFPC	0.1700E 00
13	HEAT CONDUCTIVITY	KFP1	0.5800E 03
14		KFP2	0.5800E 02
15		KFP3	0.5800E 02
16	STRENGTHS	SFPT	0.4000E 06
17		SFPC	0.4000E 06

PRIMARY MATRIX PROPERTIES; IMLS MATRIX. DRY RT. PROPERTIES.

1	ELASTIC MODULUS	EMP	0.5000E 06
2	SHEAR MODULUS	GMP	0.1773E 06
3	POISSON'S RATIO	NUMP	0.4100E 00
4	THERM. EXP. COEF.	CTEMP	0.5700E-04
5	DENSITY	RHOMP	0.4600E-01
6	HEAT CAPACITY	CMPC	0.2500E 00
7	HEAT CONDUCTIVITY	KMP	0.1250E 01
8	STRENGTHS	SMPT	0.7000E 04
9		SMPC	0.2100E 05
10		SMPS	0.7000E 04
11	MOISTURE COEF	BTAMP	0.4000E-02
12	DIFFUSIVITY	DIFMP	0.2000E-03

Item 5(b)

PRIMARY COMPOSITE PROPERTIES; 55/ 43 AS--/IMLS

BASED ON MICROMECHANICS OF INTRAPLY HYBRID COMPOSITES: ELASTIC AND THERMAL PROPERTIES.

FIBER VOLUME RATIO - 0.550 MATRIX VOLUME RATIO - 0.430 VOID VOLUME RATIO - 0.020
VOID CONDUCTIVITY - 0.22499990E 00

1	ELASTIC MODULI	EPC1	0.1726E 08
2		EPC2	0.1127E 07
3		EPC3	0.1127E 07
4	SHEAR MODULI	GPC12	0.5470E 06
5		GPC23	0.3238E 06
6		GPC13	0.5470E 06
7	POISSON'S RATIO	NUPC12	0.2945E 00
8		NUPC23	0.4821E 00
9		NUPC13	0.2945E 00
10	THERM. EXP. COEF.	CTEPC1	0.1418E-06
11		CTEPC2	0.2464E-04
12		CTEPC3	0.2464E-04
13	DENSITY	RHOPC	0.5443E-01
14	HEAT CAPACITY	CPC	0.1991E 00
15	HEAT CONDUCTIVITY	KPC1	0.3195E 03
16		KPC2	0.3702E 01
17		KPC3	0.3702E 01
18	STRENGTHS	SPC1T	0.2228E 06
19		SPC1C	0.8764E 05
20		SPC2T	0.5006E 04
21		SPC2C	0.1502E 05
22		SPC12	0.5126E 04
23	MOIST. DIFFUSIVITY	DPC1	0.8600E-04
24		DPC2	0.5168E-04
25		DPC3	0.5168E-04
26	MOIST. EXP. COEF.	BTAPC1	0.4981E-04
27		BTAPC2	0.1452E-02
28		BTAPC3	0.1452E-02
29	FLEXURAL MODULI	EPC1F	0.1726E 08
30		EPC2F	0.1127E 07
31	STRENGTHS	SPC23	0.3983E 04
32		SPC1F	0.1572E 06
33		SPC2F	0.9387E 04
34		SPCSB	0.7689E 04
35	PLY THICKNESS	TPC	0.5000E-02
36	INTERPLY THICKNESS	PLPC	0.5850E-04
37	INTERFIBER SPACING	PLPCS	0.5850E-04

Item 5(c)

--> CONSTITUENT PROPERTIES: ECHO FROM DATA BANK. <--

PRIMARY FIBER PROPERTIES; SGLA FIBER

1	ELASTIC MODULI	EFP1	0.1240E 08
2		EFP2	0.1240E 08
3	SHEAR MODULI	GFP12	0.5170E 07
4		GFP23	0.5170E 07
5	POISSON'S RATIO	NUFP12	0.2000E 00
6		NUFP23	0.2000E 00
7	THERM. EXP. COEF.	CTEFP1	0.2800E-05
8		CTEFP2	0.2800E-05
9	DENSITY	RHOFP	0.9000E-01
10	NO. OF FIBERS/END	NFP	0.2040E 03
11	FIBER DIAMETER	DIFP	0.3600E-03
12	HEAT CAPACITY	CFPC	0.1700E 00
13	HEAT CONDUCTIVITY	KFP1	0.7500E 01
14		KFP2	0.7500E 01
15		KFP3	0.7500E 01
16	STRENGTHS	SFPT	0.3600E 06
17		SFPC	0.3000E 06

PRIMARY MATRIX PROPERTIES; HMHS MATRIX. DRY RT. PROPERTIES.

1	ELASTIC MODULUS	EMP	0.7500E 06
2	SHEAR MODULUS	GMP	0.2778E 06
3	POISSON'S RATIO	NUMP	0.3500E 00
4	THERM. EXP. COEF.	CTEMP	0.4000E-04
5	DENSITY	RHOMP	0.4500E-01
6	HEAT CAPACITY	CMPC	0.2500E 00
7	HEAT CONDUCTIVITY	KMP	0.1250E 01
8	STRENGTHS	SMPT	0.2000E 05
9		SMPC	0.5000E 05
10		SMPS	0.1500E 05
11	MOISTURE COEF	BTAMP	0.4000E-02
12	DIFFUSIVITY	DIFMP	0.2000E-03

Item 5(d)

PRIMARY COMPOSITE PROPERTIES; 55/ 44 SGLA/HMHS

BASED ON MICROMECHANICS OF INTRAPLY HYBRID COMPOSITES: ELASTIC AND THERMAL PROPERTIES.

FIBER VOLUME RATIO - 0.550 MATRIX VOLUME RATIO - 0.440 VOID VOLUME RATIO - 0.010
VOID CONDUCTIVITY - 0.22499990E 00

1	ELASTIC MODULI	EPC1	0.7150E 07
2		EPC2	0.2473E 07
3		EPC3	0.2473E 07
4	SHEAR MODULI	GPC12	0.9314E 06
5		GPC23	0.5792E 06
6		GPC13	0.9314E 06
7	POISSON'S RATIO	NUPC12	0.2675E 00
8		NUPC23	0.3778E 00
9		NUPC13	0.2675E 00
10	THERM. EXP. COEF.	CTEPC1	0.4488E-05
11		CTEPC2	0.1580E-04
12		CTEPC3	0.1580E-04
13	DENSITY	RHOPC	0.6930E-01
14	HEAT CAPACITY	CPC	0.1929E 00
15	HEAT CONDUCTIVITY	KPC1	0.4675E 01
16		KPC2	0.2750E 01
17		KPC3	0.2750E 01
18	STRENGTHS	SPC1T	0.2076E 06
19		SPC1C	0.1730E 06
20		SPC2T	0.1256E 05
21		SPC2C	0.3140E 05
22		SPC12	0.1047E 05
23	MOIST. DIFFUSIVITY	DPC1	0.8800E-04
24		DPC2	0.5168E-04
25		DPC3	0.5168E-04
26	MOIST. EXP. COEF.	BTAPC1	0.1846E-03
27		BTAPC2	0.1379E-02
28		BTAPC3	0.1379E-02
29	FLEXURAL MODULI	EPC1F	0.7150E 07
30		EPC2F	0.2473E 07
31	STRENGTHS	SPC23	0.6510E 04
32		SPC1F	0.2359E 06
33		SPC2F	0.2243E 05
34		SPCSB	0.1570E 05
35	PLY THICKNESS	TPC	0.5000E-02
36	INTERPLY THICKNESS	PLPC	0.7020E-04
37	INTERFIBER SPACING	PLPCS	0.7020E-04

Item 5(e)

--> CONSTITUENT PROPERTIES: ECHO FROM DATA BANK. <--

SECONDARY FIBER PROPERTIES; AS-- FIBER

1	ELASTIC MODULI	EFS1	0.3100E 08
2		EFS2	0.2000E 07
3	SHEAR MODULI	GFS12	0.2000E 07
4		GFS23	0.1000E 07
5	POISSON'S RATIO	NUFS12	0.2000E 00
6		NUFS23	0.2500E 00
7	THERM. EXP. COEF.	CTEFS1	-0.5500E-06
8		CTEFS2	0.5600E-05
9	DENSITY	RHOFS	0.6300E-01
10	NO. OF FIBERS/END	NFS	0.1000E 05
11	FIBER DIAMETER	DIFS	0.3000E-03
12	HEAT CAPACITY	CFSC	0.1700E 00
13	HEAT CONDUCTIVITY	KFS1	0.5800E 03
14		KFS2	0.5800E 02
15		KFS3	0.5800E 02
16	STRENGTHS	SFST	0.4000E 06
17		SFSC	0.4000E 06

SECONDARY MATRIX PROPERTIES; IMHS MATRIX. DRY RT. PROPERTIES.

1	ELASTIC MODULUS	EMS	0.5000E 06
2	SHEAR MODULUS	GMS	0.1852E 06
3	POISSON'S RATIO	NUMS	0.3500E 00
4	THERM. EXP. COEF.	CTEMS	0.3600E-04
5	DENSITY	RHOMS	0.4400E-01
6	HEAT CAPACITY	CMSC	0.2500E 00
7	HEAT CONDUCTIVITY	KMS	0.1250E 01
8	STRENGTHS	SMST	0.1500E 05
9		SMSC	0.3500E 05
10		SMSS	0.1300E 05
11	MOISTURE COEF	BTAMS	0.4000E-02
12	DIFFUSIVITY	DIFMS	0.2000E-03

Item 5(f)

SECONDARY COMPOSITE PROPERTIES; 57/ 42 AS--/IMHS

BASED ON MICROMECHANICS OF INTRAPLY HYBRID COMPOSITES: ELASTIC AND THERMAL PROPERTIES.

FIBER VOLUME RATIO - 0.570 MATRIX VOLUME RATIO - 0.420 VOID VOLUME RATIO - 0.010
VOID CONDUCTIVITY - 0.22499990E 00

1	ELASTIC MODULI	ESC1	0.1788E 08
2		ESC2	0.1153E 07
3		ESC3	0.1153E 07
4	SHEAR MODULI	GSC12	0.5880E 06
5		GSC23	0.3458E 06
6		GSC13	0.5880E 06
7	POISSON'S RATIO	NUSC12	0.2645E 00
8		NUSC23	0.4294E 00
9		NUSC13	0.2645E 00
10	THERM. EXP. COEF.	CTESC1	-0.1280E-06
11		CTESC2	0.1605E-04
12		CTESC3	0.1605E-04
13	DENSITY	RHOSC	0.5439E-01
14	HEAT CAPACITY	CSC	0.1972E 00
15	HEAT CONDUCTIVITY	KSC1	0.3311E 03
16		KSC2	0.3918E 01
17		KSC3	0.3918E 01
18	STRENGTHS	SSC1T	0.2307E 06
19		SSC1C	0.1568E 06
20		SSC2T	0.1026E 05
21		SSC2C	0.2394E 05
22		SSC12	0.9369E 04
23	MOIST. DIFFUSIVITY	DSC1	0.8400E-04
24		DSC2	0.4900E-04
25		DSC3	0.4900E-04
26	MOIST. EXP. COEF.	BTASC1	0.4698E-04
27		BTASC2	0.1319E-02
28		BTASC3	0.1319E-02
29	FLEXURAL MODULI	ESC1F	0.1788E 08
30		ESC2F	0.1153E 07
31	STRENGTHS	SSC23	0.7424E 04
32		SSC1F	0.2334E 06
33		SSC2F	0.1796E 05
34		SSCSB	0.1405E 05
35	PLY THICKNESS	TSC	0.5000E-02
36	INTERPLY THICKNESS	PLSC	0.5215E-04
37	INTERFIBER SPACING	PLSCS	0.5215E-04

Item 5(g)

HYBRID COMPOSITE PROPERTIES; 60/40 SGLA/HMHS/AS--/IMHS
BASED ON MICROMECHANICS OF INTRAPLY HYBRID COMPOSITES: ELASTIC AND THERMAL PROPERTIES.

PRIMARY COMPOSITE VOLUME RATIO - 0.600 SECONDARY COMPOSITE VOLUME RATIO - 0.400

1	ELASTIC MODULI	EHC1	0.1144E 08
2		EHC2	0.1696E 07
3		EHC3	0.1945E 07
4	SHEAR MODULI	GHC12	0.7551E 06
5		GHC23	0.4561E 06
6		GHC13	0.7941E 06
7	POISSON'S RATIO	NUHC12	0.2663E 00
8		NUHC23	0.3985E 00
9		NUHC13	0.2689E 00
10	THERM. EXP. COEF.	CTEHC1	0.1603E-05
11		CTEHC2	0.1601E-04
12		CTEHC3	0.1634E-04
13	DENSITY	RHOHC	0.6334E-01
14	HEAT CAPACITY	CHC	0.1943E 00
15	HEAT CONDUCTIVITY	KHC1	0.1352E 03
16		KHC2	0.2305E 01
17		KHC3	0.2305E 01
18	STRENGTHS	SHC1T	0.2168E 06
19		SHC1C	0.1665E 06
20		SHC2T	0.9915E 04
21		SHC2C	0.2314E 05
22		SHC12	0.1195E 05
23	MOIST. DIFFUSIVITY	DHC1	0.8736E-04
24		DHC2	0.5117E-04
25		DPC3	0.5117E-04
26	MOIST. EXP. COEF.	BTAHC1	0.9858E-04
27		BTAHC2	0.8565E-03
28		BTAHC3	0.1455E-02
29	FLEXURAL MODULI	EHC1F	0.1144E 08
30		EHC2F	0.1696E 07
31	STRENGTHS	SHC23	0.1019E 05
32		SHC1F	0.2355E 06
33		SHC2F	0.1735E 05
34		SHCSB	0.1793E 05
35	PLY THICKNESS	THC	0.5000E-02
36	INTERPLY THICKNESS	PLHC	0.5215E-04
37	INTERFIBER SPACING	PLHCS	0.5215E-04
38	FIBER VOL. RATIO	VFH	0.5580E 00
39	MOISTURE CONTENT	M	0.0000
40	MATRIX VOL. RATIO	VMH	0.4320E 00

Item 6

3-D COMPOSITE STRAIN STRESS TEMPERATURE MOISTURE RELATIONS - STRUCTURAL AXES

	-1-	-2-	-3-	-4-	-5-	-6-	-DT-	-DM-
1	0.6976E-07	-0.5952E-08	-0.2727E-07	0.0000	0.0000	0.3255E-13	0.1102E-05	0.1009E-03
2	-0.5952E-08	0.1962E-06	-0.8485E-07	0.0000	0.0000	-0.1464E-11	0.5805E-05	0.3370E-03
3	-0.2727E-07	-0.8485E-07	0.5614E-06	0.0000	0.0000	0.6682E-12	0.2839E-04	0.1859E-02
4	0.0000	0.0000	0.0000	0.2139E-05	0.5229E-12	0.0000	0.0000	0.0000
5	0.0000	0.0000	0.0000	0.5229E-12	0.1935E-05	0.0000	0.0000	0.0000
6	0.3255E-13	-0.1464E-11	0.6682E-12	0.0000	0.0000	0.1622E-05	-0.4330E-10	-0.2425E-08

3-D COMPOSITE STRESS STRAIN RELATIONS - STRUCTURAL AXES

	-1-	-2-	-3-	-4-	-5-	-6-
1	0.1473E 08	0.8093E 06	0.8377E 06	0.0000	0.0000	0.8960E-01
2	0.8093E 06	0.5499E 07	0.8703E 06	0.0000	0.0000	0.4587E 01
3	0.8377E 06	0.8703E 06	0.1953E 07	0.0000	0.0000	-0.3603E-01
4	0.0000	0.0000	0.0000	0.4676E 06	-0.1263E 00	0.0000
5	0.0000	0.0000	0.0000	-0.1263E 00	0.5167E 06	0.0000
6	0.8960E-01	0.4587E 01	-0.3603E-01	0.0000	0.0000	0.6164E 06

MAT9 CARD FOR MSC/NASTRAN SOLID ELEMENTS

```
G11,G12,G13,G14,G15,G16,G22,G23,G24,G25,G26,G33,G34,G35,G36,G44,G45,G46,G55,G56,G66
 0.14731064E 08 0.80927925E 06 0.83770038E 06 0.89597344E-01     0.00000000     0.00000000 0.54987690E 07 0.87032406E 06
 0.45865879E 01     0.00000000     0.00000000 0.19533170E 07-0.36027569E-01     0.00000000     0.00000000 0.61636813E 06
     0.00000000     0.00000000 0.46757519E 06-0.12633294E 00 0.51670638E 06
```

Item 7

C O M P O S I T E P R O P E R T I E S

COMPOSITE PROPERTIES - VALID ONLY FOR CONSTANT TEMPERATURE THROUGH THICKNESS
LINES 1 TO 31 3-D COMPOSITE PROPERTIES ABOUT MATERIALAXES
LINES 33 TO 62 2-D COMPOSITE PROPERTIES ABOUT STRUCTURAL AXES

1	RHOC	0.5740E-01	32	B2DEC	0.0000
2	TC	0.3000E-01	33	CC11	0.1215E 08
3	CC11	0.1473E 08	34	CC12	0.3746E 06
4	CC12	0.8093E 06	35	CC13	0.1067E 00
5	CC13	0.8377E 06	36	CC22	0.4610E 07
6	CC22	0.5499E 07	37	CC23	0.4055E 01
7	CC23	0.8703E 06	38	CC33	0.6164E 06
8	CC33	0.1953E 07	39	EC11	0.1212E 08
9	CC44	0.4676E 06	40	EC22	0.4598E 07
10	CC55	0.5167E 06	41	EC12	0.6164E 06
11	CC66	0.6164E 06	42	NUC12	0.8126E-01
12	CTE11	0.1102E-05	43	NUC21	0.3084E-01
13	CTE22	0.5805E-05	44	CSN13	-0.3615E-06
14	CTE33	0.2839E-04	45	CSN31	-0.1839E-07
15	HK11	0.2138E 03	46	CSN23	0.6574E-05
16	HK22	0.4755E 02	47	CSN32	0.8811E-06
17	HK33	0.3080E 01	48	CTE11	0.1102E-05
18	HHC	0.1975E 00	49	CTE22	0.5805E-05
19	EC11	0.1433E 08	50	CTE12	-0.4330E-10
20	EC22	0.5098E 07	51	HK11	0.2138E 03
21	EC33	0.1781E 07	52	HK22	0.4755E 02
22	EC23	0.4676E 06	53	HK12	-0.5785E-04
23	EC31	0.5167E 06	54	HHC	0.1975E 00
24	EC12	0.6164E 06	55	DPC11	0.3573E-02
25	NUC12	0.8531E-01	56	DPC22	0.3578E-02
26	NUC21	0.3034E-01	57	DPC33	0.2000E 05
27	NUC13	0.3908E 00	58	DPC12	0.0000
28	NUC31	0.4856E-01	59	BTAC11	0.1009E-03
29	NUC23	0.4326E 00	60	BTAC22	0.3370E-03
30	NUC32	0.1511E 00	61	BTAC33	0.1859E-02
31	ZCGC	0.1500E-01	62	BTAC12	-0.2425E-08

Item 8

FORCES			FORCE DISPLACEMENT RELATIONS				DISPL	T-FORCES	H-FORCES
NX	0.3644E 06	0.1124E 05	0.3201E-02	0.0000	0.0000	-0.7276E-11	UX	0.0000	0.0000
NY	0.1124E 05	0.1383E 06	0.1217E 00	0.0000	-0.1373E-03	-0.2619E-09	VY	0.0000	0.0000
NXY	0.3201E-02	0.1217E 00	0.1849E 05	-0.7276E-11	-0.2619E-09	0.0000	VXPUY	0.0000	0.0000
MX	0.0000	0.0000	-0.7276E-11	0.3776E 02	0.7610E 00	0.2667E-07	WXX	0.0000	0.0000
MY	0.0000	-0.1373E-03	-0.2619E-09	0.7610E 00	0.3419E 01	0.1014E-05	WYY	0.0000	0.0000
MXY	-0.7276E-11	-0.2619E-09	0.0000	0.2667E-07	0.1014E-05	0.1248E 01	WXY	0.0000	0.0000

Item 9

REDUCED STIFFNESS MATRIX

0.36441E 06	0.11238E 05	0.32006E-02
0.11238E 05	0.13830E 06	0.12165E 00
0.32006E-02	0.12165E 00	0.18491E 05

REDUCED BENDING REGIDITIES

0.37763E 02	0.76104E 00	0.26672E-07
0.76104E 00	0.34186E 01	0.10138E-05
0.26672E-07	0.10138E-05	0.12481E 01

Item 10

S O M E U S E F U L D A T A F O R F.E. A N A L Y S I S

COMPOSITE THICKNESS FOR F.E. ANALYSIS = 0.30000E-01

PROPERTIES FOR F.E. ANALYSIS E11,E12,E13,E22,E23,E33 PROPERTIES SCALED BY 10**-6
0.32533E-01 -0.67069E-02 -0.29839E-07 0.21747E 00 0.14296E-05 0.16224E 01

BENDING EQUIVALENT PROPERTIES NUCXY, NCYX, ECXX, ECYY, GCXY
0.22261E 00 0.20153E-01 0.16708E 08 0.15126E 07 0.55473E 06

NASTRAN MEMBRANE EQUIVALENT ELASTIC COEFFICIENTS G11,G12,G13,G22,G23,G33
0.12147E 08 0.37462E 06 0.10669E 00 0.46099E 07 0.40551E 01 0.61637E 06

NASTRAN BENDING EQUIVALENT ELASTIC COEFFICIENTS G11,G12,G13,G22,G23,G33
0.16734E 08 0.33824E 06 0.11854E-01 0.15194E 07 0.45056E 00 0.55473E 06

Item 11

	DISP.	DISPLACEMENT FORCE RELATIONS						COMBINED FORCES
		-1-	-2-	-3-	-4-	-5-	-6-	
1	0.2751E-02	0.2751E-05	-0.2236E-06	0.9946E-12	0.1818E-12	-0.9021E-11	-0.2356E-16	0.1000E 04
2	-0.2236E-03	-0.2236E-06	0.7249E-05	-0.4765E-10	-0.5895E-11	0.2925E-09	0.1283E-14	0.0000
3	0.9946E-09	0.9946E-12	-0.4765E-10	0.5408E-04	-0.3466E-16	0.2237E-14	-0.1181E-19	0.0000
4	0.1818E-09	0.1818E-12	-0.5895E-11	-0.3466E-16	0.2660E-01	-0.5922E-02	0.4241E-08	0.0000
5	-0.9021E-08	-0.9021E-11	0.2925E-09	0.2237E-14	-0.5922E-02	0.2938E 00	-0.2385E-06	0.0000
6	-0.2356E-13	-0.2356E-16	0.1283E-14	-0.1181E-19	0.4241E-08	-0.2385E-06	0.8012E 00	0.0000

NOTE: THE DISPLACEMENTS ARE REFERENCE PLANE MEMBRANE STRAINS (UX , VY , VXPUY) AND CURVATURES (WXX , WYY , WXY)

Item 12

P L Y H Y G R O T H E R M O M E C H A N I C A L P R O P E R T I E S / R E S P O N S E

FOR LOAD CONDITIONS
MEMBRANE LOADS NBS(X,Y,XY-M) ARE 1000. 0. 0.
BENDING LOADS MBS(X,Y,XY-M) ARE 0. 0. 0.
QXZ,QYZ AND APPLIED PRESSURES ARE 0. 0. 0. 0.
NOTE : NO MOISTURE OR TEMPERATURE

LAYER PROPERTIES, ROWS-PROPERTY, COLUMNS-LAYER

	PLY NUMBER	1	2	3	4
	MATERIAL SYSTEM	AS--/IMLS	SGLA/HMHS	SGLA/HMHS	AS--/IMLS
		AS--/IMLS	AS--/IMHS	AS--/IMHS	AS--/IMLS
	ORIENTATION	0.0	90.0	90.0	0.0
1	KV	0.2000E-01	0.1000E-01	0.1000E-01	0.2000E-01
2	KF	0.5500E 00	0.5580E 00	0.5580E 00	0.5500E 00
3	KFB	0.5390E 00	0.5524E 00	0.5524E 00	0.5390E 00
4	KM	0.4500E 00	0.4420E 00	0.4420E 00	0.4500E 00
5	KMB	0.4410E 00	0.4376E 00	0.4376E 00	0.4410E 00
6	RHOL	0.5443E-01	0.6334E-01	0.6334E-01	0.5443E-01
7	TL	0.1000E-01	0.5000E-02	0.5000E-02	0.1000E-01
8	DELTA	0.5850E-04	0.5215E-04	0.5215E-04	0.5850E-04
9	ILDC	0.0000	0.0000	0.0000	0.0000
10	ZB	0.5000E-02	0.1250E-01	0.1750E-01	0.2500E-01
11	ZGC	-0.1000E-01	-0.2500E-02	0.2500E-02	0.1000E-01
12	THCS	0.0000	0.0000	0.0000	0.0000
13	THLC	0.0000	0.1571E 01	0.1571E 01	0.0000
14	THLS	0.0000	0.1571E 01	0.1571E 01	0.0000
15	SC11	0.2101E 08	0.1323E 08	0.1323E 08	0.2101E 08
16	SC12	0.7797E 06	0.8684E 06	0.8684E 06	0.7797E 06
17	SC13	0.7797E 06	0.8684E 06	0.8684E 06	0.7797E 06
18	SC22	0.1631E 07	0.2166E 07	0.2166E 07	0.1631E 07
19	SC23	0.8713E 06	0.9537E 06	0.9537E 06	0.8713E 06
20	SC33	0.1776E 07	0.2307E 07	0.2307E 07	0.1776E 07
21	SC44	0.3238E 06	0.4561E 06	0.4561E 06	0.3238E 06
22	SC55	0.5470E 06	0.7551E 06	0.7551E 06	0.5470E 06
23	SC66	0.5470E 06	0.7551E 06	0.7551E 06	0.5470E 06
24	CTE11	0.1418E-06	0.1603E-05	0.1603E-05	0.1418E-06
25	CTE22	0.2464E-04	0.1601E-04	0.1601E-04	0.2464E-04
26	CTE33	0.2464E-04	0.1601E-04	0.1601E-04	0.2464E-04
27	HK11	0.3195E 03	0.1352E 03	0.1352E 03	0.3195E 03
28	HK22	0.3702E 01	0.2305E 01	0.2305E 01	0.3702E 01
29	HK33	0.3702E 01	0.2305E 01	0.2305E 01	0.3702E 01
30	HCL	0.1991E 00	0.1943E 00	0.1943E 00	0.1991E 00
31	EL11	0.1726E 08	0.1144E 08	0.1144E 08	0.1726E 08
32	EL22	0.1127E 07	0.1696E 07	0.1696E 07	0.1127E 07
33	EL33	0.1127E 07	0.1696E 07	0.1696E 07	0.1127E 07
34	GL23	0.3238E 06	0.4561E 06	0.4561E 06	0.3238E 06
35	GL13	0.5470E 06	0.7551E 06	0.7551E 06	0.5470E 06
36	GL12	0.5470E 06	0.7551E 06	0.7551E 06	0.5470E 06
37	NUL12	0.2945E 00	0.2663E 00	0.2663E 00	0.2945E 00
38	NUL21	0.1922E-01	0.3947E-01	0.3947E-01	0.1922E-01
39	NUL13	0.2945E 00	0.2663E 00	0.2663E 00	0.2945E 00
40	NUL31	0.1922E-01	0.3947E-01	0.3947E-01	0.1922E-01
41	NUL23	0.4821E 00	0.3985E 00	0.3985E 00	0.4821E 00
42	NUL32	0.4821E 00	0.3985E 00	0.3985E 00	0.4821E 00
43	DPL1	0.8600E-04	0.8736E-04	0.8736E-04	0.8600E-04
44	DPL2	0.5168E-04	0.5117E-04	0.5117E-04	0.5168E-04
45	DPL3	0.5168E-04	0.5117E-04	0.5117E-04	0.5168E-04
46	BTAL1	0.4981E-04	0.9858E-04	0.9853E-04	0.4981E-04
47	BTAL2	0.1452E-02	0.8565E-03	0.8565E-03	0.1452E-02
48	BTAL3	0.1452E-02	0.1455E-02	0.1455E-02	0.1452E-02
49	ILMFC	0.0000	0.8405E 02	0.8916E 02	0.8405E 02
50	TEMPD	0.0000	0.0000	0.0000	0.0000
51	LSC11T	0.2228E 06	0.2168E 06	0.2168E 06	0.2228E 06
52	LSC11C	0.8764E 05	0.1665E 06	0.1665E 06	0.8764E 05
53	LSC11D	0.8764E 05	0.1665E 06	0.1665E 06	0.8764E 05
54	LSC22T	0.5006E 04	0.9915E 04	0.9915E 04	0.5006E 04
55	LSC22C	0.1502E 05	0.2314E 05	0.2314E 05	0.1502E 05
56	LSC12	0.5126E 04	0.1195E 05	0.1195E 05	0.5126E 04
57	LSC23	0.3983E 04	0.1019E 05	0.1019E 05	0.3983E 04
58	LSCC23	0.0000	0.6196E 05	0.1351E 06	0.4417E 05
59	LSCC13	0.0000	0.7303E 05	0.8147E 05	0.5238E 05
60	LSCDF	0.0000	0.4164E-03	0.3925E-03	0.4164E-03
61	KL12AB	0.9858E 00	0.9075E 00	0.9075E 00	0.9858E 00
62	MDEIE	0.9646E 00	0.7801E 00	0.7801E 00	0.9646E 00
63	RELROT	0.0000	0.1000E 01	0.1000E 01	0.1000E 01
64	EPS11	0.2751E-02	-0.2236E-03	-0.2236E-03	0.2751E-02
65	EPS22	-0.2236E-03	0.2751E-02	0.2751E-02	-0.2236E-03
66	EPS12	0.9946E-09	-0.8536E-08	-0.8536E-08	0.9946E-09
67	SIG11	0.4769E 05	-0.1329E 04	-0.1329E 04	0.4769E 05
68	SIG22	0.6647E 03	0.4614E 04	0.4614E 04	0.6647E 03
69	SIG12	0.5441E-03	-0.6445E-02	-0.6445E-02	0.5441E-03
70	DELFI	0.0000	-0.4765E-08	0.0000	0.4765E-08
71	HFC	0.1121E 01	0.6393E 00	0.6393E 00	0.1121E 01
72	MPCTGE	0.0000	0.0000	0.0000	0.0000
73	SIG13	0.0000	0.0000	0.0000	0.0000
74	SIG23	0.0000	0.0000	0.0000	0.0000
75	SIG33	0.0000	0.0000	0.0000	0.0000

Item 13

D E.T A I L S O F P O I S S O N R A T I O M I S M A T C H

POISSON"S RATIOS OF THE COMPOSITE
ANUCXY = 0.0813
ANUCYX = 0.0308
ANUCSX = -0.0000
ANUCSY = 0.0000

NO.	THETA	ANULXY	ANULSX	ANULSY	POIDFN	POIDFS
1	0.0	0.2945	0.0000	0.0000	0.2132	-0.0000
2	90.0	0.0395	-0.0000	-0.0000	-0.0418	-0.0000
3	90.0	0.0395	-0.0000	-0.0000	-0.0418	-0.0000
4	0.0	0.2945	0.0000	0.0000	0.2132	-0.0000

Item 14

F R E E E D G E S T R E S S E S

PLY	THETA	SIGXX	SIGYY	SIGXY	YDCAY LENGTH	SIGZY	SIGZZ	SIGZX
1	0.0	0.143E 01	0.199E-01	0.163E-07	0.119E 00	0.116E-01	0.337E-02	0.412E-08
1	0.0	0.143E 01	0.199E-01	0.163E-07	0.000	0.116E-01	0.337E-02	0.412E-08
2	90.0	0.138E 00	-0.399E-01	-0.326E-07	0.298E 00	-0.979E-08	0.803E-03	0.248E-08
2	90.0	0.138E 00	-0.399E-01	-0.326E-07	0.345E 00	-0.845E-08	0.200E-03	0.248E-08
3	90.0	0.138E 00	-0.399E-01	-0.326E-07	0.298E 00	-0.574E-08	0.803E-03	0.248E-08
3	90.0	0.138E 00	-0.399E-01	-0.326E-07	0.345E 00	-0.495E-08	0.200E-03	0.248E-08
4	0.0	0.143E 01	0.199E-01	0.163E-07	0.119E 00	0.116E-01	0.337E-02	0.412E-08
4	0.0	0.143E 01	0.199E-01	0.163E-07	0.000	0.116E-01	0.337E-02	0.412E-08

NOTE: THE INTERLAMINAR STRESSES ARE BETWEEN PLIES (I-1) AND (I).
NOTE: IF THE PLY NO IS REPEATED THEN THE SECOND ONE INDICATES STRESSES IN THE SECONDARY COMPOSITE.
NOTE: FOR ANGLE PLY LAMINATES SIGYY IS 0. CONSEQUENTLY SIGZY AN D SIGZZ ARE COMPUTED AS ZERO.
TO OBTAIN NONTRIVIAL SIGZY AND SIGZZ, ONE MUST SPECIFY A THIN INTERPLY LAYER.
THE INTERPLY LAYER THICKNESS MAY BE OBTAINED FROM THE PLY PROPERTY TABLE.

Item 15(a)

M I C R O S T R E S S E S

FOR LOAD CONDITIONS
MEMBRANE LOADS NBS(X,Y,XY-M) ARE 1000. 0. 0.
BENDING LOADS MBS(X,Y,XY-M) ARE 0. 0. 0.
QXZ,QYZ AND APPLIED PRESSURES ARE 0. 0. 0. 0.
NOTE : NO MOISTURE OR TEMPERATURE

(NOTE: ROWS-PROPERTY, COLUMNS-LAYER)

PLY NUMBER		1	2	3	4
MATERIAL SYSTEM		AS--/IMLS	SGLA/HMHS	SGLA/HMHS	AS--/IMLS
		AS--/IMLS	AS--/IMHS	AS--/IMHS	AS--/IMLS
ORIENTATION		0.0	90.0	90.0	0.0
1	SM1L	0.1381E 04	-0.8714E 02	-0.8714E 02	0.1381E 04
1	SM1L	0.0000	-0.5809E 02	-0.5809E 02	0.0000
2	SM1T	0.2669E 03	0.1534E 04	0.1534E 04	0.2669E 03
2	SM1T	0.0000	0.1561E 04	0.1561E 04	0.0000
3	SF1L	0.8564E 05	-0.1441E 04	-0.1441E 04	0.8564E 05
3	SF1L	0.0000	-0.3602E 04	-0.3602E 04	0.0000
4	SF1T	-0.2185E 03	-0.4087E 03	-0.4087E 03	-0.2185E 03
4	SF1T	0.0000	-0.2406E 04	-0.2406E 04	0.0000
5	SM2AL	0.1595E 03	-0.7294E 01	-0.7294E 01	0.1595E 03
5	SM2AL	0.0000	-0.4862E 01	-0.4862E 01	0.0000
6	SM2AT	0.3445E 03	0.1706E 04	0.1706E 04	0.3445E 03
6	SM2AT	0.0000	0.2324E 04	0.2324E 04	0.0000
7	SM2BL	-0.1662E 05	0.4632E 03	0.4632E 03	-0.1662E 05
7	SM2BL	0.0000	0.4314E 03	0.4314E 03	0.0000
8	SM2BT	0.7763E 03	0.3858E 04	0.3858E 04	0.7763E 03
8	SM2BT	0.0000	0.7882E 04	0.7882E 04	0.0000
9	SF2BL	-0.1662E 05	0.4632E 03	0.4632E 03	-0.1662E 05
9	SF2BL	0.0000	0.4314E 03	0.4314E 03	0.0000
10	SF2BT	0.7763E 03	0.3858E 04	0.3858E 04	0.7763E 03
10	SF2BT	0.0000	0.7882E 04	0.7882E 04	0.0000
11	SM3AL	0.1595E 03	-0.7294E 01	-0.7294E 01	0.1595E 03
11	SM3AL	0.0000	-0.4862E 01	-0.4862E 01	0.0000
12	SM3AT	-0.2126E 02	-0.9887E 02	-0.9887E 02	-0.2126E 02
12	SM3AT	0.0000	-0.6591E 02	-0.6591E 02	0.0000
13	SM3BL	-0.1662E 05	0.4632E 03	0.4632E 03	-0.1662E 05
13	SM3BL	0.0000	0.4314E 03	0.4314E 03	0.0000
14	SM3BT	0.2316E 03	0.1607E 04	0.1607E 04	0.2316E 03
14	SM3BT	0.0000	0.1497E 04	0.1497E 04	0.0000
15	SF3BL	-0.1662E 05	0.4632E 03	0.4632E 03	-0.1662E 05
15	SF3BL	0.0000	0.4314E 03	0.4314E 03	0.0000
16	SF3BT	0.2316E 03	0.1607E 04	0.1607E 04	0.2316E 03
16	SF3BT	0.0000	0.1497E 04	0.1497E 04	0.0000
17	SM12A	0.2137E-03	-0.2348E-02	-0.2348E-02	0.2137E-03
17	SM12A	0.0000	-0.2439E-02	-0.2439E-02	0.0000
18	SM12B	0.6592E-03	-0.6382E-02	-0.6382E-02	0.6592E-03
18	SM12B	0.0000	-0.9945E-02	-0.9945E-02	0.0000
19	SF12B	0.6592E-03	-0.6382E-02	-0.6382E-02	0.6592E-03
19	SF12B	0.0000	-0.9945E-02	-0.9945E-02	0.0000
20	SM13A	0.2137E-03	-0.2348E-02	-0.2348E-02	0.2137E-03
20	SM13A	0.0000	-0.2439E-02	-0.2439E-02	0.0000
21	SM13B	0.6592E-03	-0.6382E-02	-0.6382E-02	0.6592E-03
21	SM13B	0.0000	-0.9945E-02	-0.9945E-02	0.0000
22	SF13B	0.6592E-03	-0.6382E-02	-0.6382E-02	0.6592E-03
22	SF13B	0.0000	-0.9945E-02	-0.9945E-02	0.0000
23	SM23A	0.0000	0.0000	0.0000	0.0000
23	SM23A	0.0000	0.0000	0.0000	0.0000
24	SM23B	0.0000	0.0000	0.0000	0.0000
24	SM23B	0.0000	0.0000	0.0000	0.0000
25	SF23B	0.0000	0.0000	0.0000	0.0000
25	SF23B	0.0000	0.0000	0.0000	0.0000

NOTATION: S --- STRESS (SIGMA)
M --- MATRIX AND F --- FIBER
1,2,3 --- DIRECTIONS FOR STRESSES - PLY MATERIAL AXES
L,T --- DIRECTIONS OF PLY STRESSES
A --- REGION CONTAINING NO FIBERS
B --- REGION CONTAINING FIBERS AND MATRIX
EXAMPLE: SM2AL STANDS FOR TRANSVERSE NORMAL STRESS IN REGION A DUE TO A LOAD IN THE LOGITUDINAL DIRECTION

Item 15(b)

M I C R O S T R E S S I N F L U E N C E C O E F F I C I E N T S

THE FOLLOWING ARE THE MICROSTRESS INFLUENCE COEFFICIENTS FOR THE PRIMARY COMPOSITE AS--/IMLS SYSTEM

INF. COEF.	SIGMA11 LBS/SQ.IN	SIGMA22 LBS/SQ.IN	SIGMA12 LBS/SQ.IN	SIGMA13 LBS/SQ.IN	SIGMA23 LBS/SQ.IN	DELTA T 1 DEG F	DELTA M 1%
1 SM11	0.0290	0.4015	0.0000	0.0000	0.0000	-28.4291	-1975.0911
2 SM22A	0.0033	0.5183	0.0000	0.0000	0.0000	-16.1814	-1274.0061
3 SM22B	-0.3484	1.1678	0.0000	0.0000	0.0000	5.6376	443.8633
4 SM12A	0.0000	0.0000	0.3927	0.0000	0.0000	0.0000	0.0000
5 SM12B	0.0000	0.0000	1.2116	0.0000	0.0000	0.0000	0.0000
6 SM13A	0.0000	0.0000	0.0000	0.3927	0.0000	0.0000	0.0000
7 SM13B	0.0000	0.0000	0.0000	1.2116	0.0000	0.0000	0.0000
8 SM23A	0.0000	0.0000	0.0000	0.0000	0.5475	0.0000	0.0000
9 SM23B	0.0000	0.0000	0.0000	0.0000	1.4043	0.0000	0.0000
10 SM33A	0.0033	-0.0320	0.0000	0.0000	0.0000	-16.1814	-1274.0061
11 SM33B	-0.3484	0.3484	0.0000	0.0000	0.0000	5.6376	443.8633
12 SF11	1.7955	-0.3288	0.0000	0.0000	0.0000	21.4465	1544.1631
13 SF22B	-0.3484	1.1678	0.0000	0.0000	0.0000	5.6376	443.8633
14 SF33B	-0.3484	0.3484	0.0000	0.0000	0.0000	5.6376	443.8633
15 SF12	0.0000	0.0000	1.2116	0.0000	0.0000	0.0000	0.0000
16 SF13	0.0000	0.0000	0.0000	1.2116	0.0000	0.0000	0.0000
17 SF23B	0.0000	0.0000	0.0000	0.0000	1.4043	0.0000	0.0000

NOTE: TO OBTAIN THE ABSOLUTE VALUE OF THE MICROSTRESSES THE INF. COEF. SHOULD BE MULTIPLIED BY THE APPROPRIATE STRESSES OR THE TEMPERATURE GRADIENT OR THE MOISTURE CONTENT.

EXPLANATION: SM22B ,FOR EXAMPLE, STANDS FOR TRANSVERSE NORMAL STRESS INFLUENCE COEFFICIENT IN REGION B

M I C R O S T R E S S I N F L U E N C E C O E F F I C I E N T S

THE FOLLOWING ARE THE MICROSTRESS INFLUENCE COEFFICIENTS FOR THE PRIMARY COMPOSITE SGLA/HMHS SYSTEM

INF. COEF.	SIGMA11 LBS/SQ.IN	SIGMA22 LBS/SQ.IN	SIGMA12 LBS/SQ.IN	SIGMA13 LBS/SQ.IN	SIGMA23 LBS/SQ.IN	DELTA T 1 DEG F	DELTA M 1%
1 SM11	0.0655	0.3325	0.0000	0.0000	0.0000	-28.7981	-2926.0596
2 SM22A	0.0055	0.3698	0.0000	0.0000	0.0000	-17.9927	-2357.6494
3 SM22B	-0.3484	0.8363	0.0000	0.0000	0.0000	6.2687	821.4043
4 SM12A	0.0000	0.0000	0.3643	0.0000	0.0000	0.0000	0.0000
5 SM12B	0.0000	0.0000	0.9902	0.0000	0.0000	0.0000	0.0000
6 SM13A	0.0000	0.0000	0.0000	0.3643	0.0000	0.0000	0.0000
7 SM13B	0.0000	0.0000	0.0000	0.9902	0.0000	0.0000	0.0000
8 SM23A	0.0000	0.0000	0.0000	0.0000	0.6091	0.0000	0.0000
9 SM23B	0.0000	0.0000	0.0000	0.0000	2.0423	0.0000	0.0000
10 SM33A	0.0055	-0.0214	0.0000	0.0000	0.0000	-17.9927	-2357.6494
11 SM33B	-0.3484	0.3484	0.0000	0.0000	0.0000	6.2687	821.4043
12 SF11	1.0837	-0.0886	0.0000	0.0000	0.0000	-14.8484	1222.4417
13 SF22B	-0.3484	0.8363	0.0000	0.0000	0.0000	6.2687	821.4043
14 SF33B	-0.3484	0.3484	0.0000	0.0000	0.0000	6.2687	821.4043
15 SF12	0.0000	0.0000	0.9902	0.0000	0.0000	0.0000	0.0000
16 SF13	0.0000	0.0000	0.0000	0.9902	0.0000	0.0000	0.0000
17 SF23B	0.0000	0.0000	0.0000	0.0000	2.0423	0.0000	0.0000

NOTE: TO OBTAIN THE ABSOLUTE VALUE OF THE MICROSTRESSES THE INF. COEF. SHOULD BE MULTIPLIED BY THE APPROPRIATE STRESSES OR THE TEMPERATURE GRADIENT OR THE MOISTURE CONTENT.

EXPLANATION: SM22B ,FOR EXAMPLE, STANDS FOR TRANSVERSE NORMAL STRESS INFLUENCE COEFFICIENT IN REGION B

M I C R O S T R E S S I N F L U E N C E C O E F F I C I E N T S

THE FOLLOWING ARE THE MICROSTRESS INFLUENCE COEFFICIENTS FOR THE SECONDARY COMPOSITE AS--/IMHS SYSTEM

INF. COEF.	SIGMA11 LBS/SQ.IN	SIGMA22 LBS/SQ.IN	SIGMA12 LBS/SQ.IN	SIGMA13 LBS/SQ.IN	SIGMA23 LBS/SQ.IN	DELTA T 1 DEG F	DELTA M 1%
1 SM11	0.0437	0.3384	0.0000	0.0000	0.0000	-17.1987	-1950.7063
2 SM22A	0.0037	0.5036	0.0000	0.0000	0.0000	-9.9952	-1571.7661
3 SM22B	-0.3245	1.7084	0.0000	0.0000	0.0000	3.2438	510.0889
4 SM12A	0.0000	0.0000	0.3784	0.0000	0.0000	0.0000	0.0000
5 SM12B	0.0000	0.0000	1.5430	0.0000	0.0000	0.0000	0.0000
6 SM13A	0.0000	0.0000	0.3784	0.0000	0.0000	0.0000	0.0000
7 SM13B	0.0000	0.0000	1.5430	0.0000	0.0000	0.0000	0.0000
8 SM23A	0.0000	0.0000	0.0000	0.0000	0.4060	0.0000	0.0000
9 SM23B	0.0000	0.0000	0.0000	0.0000	1.0551	0.0000	0.0000
10 SM33A	0.0037	-0.0143	0.0000	0.0000	0.0000	-9.9952	-1571.7661
11 SM33B	-0.3245	0.3245	0.0000	0.0000	0.0000	3.2438	510.0889
12 SF11	2.7093	-0.5215	0.0000	0.0000	0.0000	66.7289	3056.1045
13 SF22B	-0.3245	1.7084	0.0000	0.0000	0.0000	3.2438	510.0889
14 SF33B	-0.3245	0.3245	0.0000	0.0000	0.0000	3.2438	510.0889
15 SF12	0.0000	0.0000	1.5430	0.0000	0.0000	0.0000	0.0000
16 SF13	0.0000	0.0000	1.5430	0.0000	0.0000	0.0000	0.0000
17 SF23B	0.0000	0.0000	0.0000	0.0000	1.0551	0.0000	0.0000

NOTE: TO OBTAIN THE ABSOLUTE VALUE OF THE MICROSTRESSES THE INF. COEF. SHOULD BE MULTIPLIED BY THE APPROPRIATE STRESSES OR THE TEMPERATURE GRADIENT OR THE MOISTURE CONTENT.

EXPLANATION: SM22B ,FOR EXAMPLE, STANDS FOR TRANSVERSE NORMAL STRESS INFLUENCE COEFFICIENT IN REGION B

Item 16

STRESS CONCENTRATION FACTORS
(AROUND A CIRCULAR HOLE)

NOTE: K1XX --> STRESS CONCENTRATION FACTOR DUE TO SIGMA XX
K1YY --> STRESS CONCENTRATION FACTOR DUE TO SIGMA YY
K1XY --> STRESS CONCENTRATION FACTOR DUE TO SIGMA XY
LAYUP --> 0 90 90 0

THETA	K1XX	K1YY	K1XY	THETA	K1XX	K1YY	K1XY
0.0	-0.6160	3.8562	0.0000	180.0	-0.6160	3.8562	0.0002
5.0	-0.5709	3.6729	-1.1975	185.0	-0.5709	3.6729	-1.1973
10.0	-0.4572	3.2156	-2.1209	190.0	-0.4572	3.2155	-2.1208
15.0	-0.3168	2.6650	-2.6886	195.0	-0.3168	2.6649	-2.6885
20.0	-0.1799	2.1516	-2.9777	200.0	-0.1799	2.1515	-2.9777
25.0	-0.0569	1.7253	-3.1020	205.0	-0.0570	1.7252	-3.1020
30.0	0.0532	1.3875	-3.1493	210.0	0.0532	1.3875	-3.1493
35.0	0.1566	1.1225	-3.1741	215.0	0.1566	1.1225	-3.1741
40.0	0.2613	0.9117	-3.2080	220.0	0.2613	0.9116	-3.2080
45.0	0.3764	0.7383	-3.2701	225.0	0.3764	0.7382	-3.2701
50.0	0.5138	0.5879	-3.3730	230.0	0.5137	0.5879	-3.3730
55.0	0.6898	0.4473	-3.5263	235.0	0.6898	0.4472	-3.5262
60.0	0.9302	0.3019	-3.7367	240.0	0.9301	0.3018	-3.7367
65.0	1.2764	0.1331	-4.0029	245.0	1.2763	0.1331	-4.0028
70.0	1.7980	-0.0864	-4.2958	250.0	1.7979	-0.0865	-4.2957
75.0	2.6025	-0.3968	-4.5006	255.0	2.6023	-0.3969	-4.5006
80.0	3.7983	-0.8378	-4.2743	260.0	3.7980	-0.8379	-4.2744
85.0	5.2286	-1.3548	-2.9009	265.0	5.2283	-1.3549	-2.9013
90.0	5.9765	-1.6233	-0.0001	270.0	5.9765	-1.6233	-0.0008
95.0	5.2287	-1.3549	2.9007	275.0	5.2290	-1.3550	2.9003
100.0	3.7984	-0.8379	4.2743	280.0	3.7987	-0.8380	4.2741
105.0	2.6026	-0.3969	4.5007	285.0	2.6028	-0.3970	4.5007
110.0	1.7980	-0.0865	4.2958	290.0	1.7982	-0.0865	4.2958
115.0	1.2764	0.1330	4.0029	295.0	1.2765	0.1330	4.0030
120.0	0.9302	0.3018	3.7367	300.0	0.9303	0.3018	3.7368
125.0	0.6899	0.4472	3.5263	305.0	0.6899	0.4472	3.5263
130.0	0.5138	0.5879	3.3730	310.0	0.5138	0.5878	3.3731
135.0	0.3764	0.7382	3.2702	315.0	0.3764	0.7382	3.2702
140.0	0.2613	0.9116	3.2081	320.0	0.2613	0.9116	3.2081
145.0	0.1567	1.1225	3.1741	325.0	0.1567	1.1224	3.1741
150.0	0.0532	1.3875	3.1493	330.0	0.0532	1.3874	3.1493
155.0	-0.0569	1.7252	3.1021	335.0	-0.0569	1.7251	3.1021
160.0	-0.1799	2.1515	2.9777	340.0	-0.1798	2.1514	2.9778
165.0	-0.3168	2.6648	2.6886	345.0	-0.3168	2.6647	2.6887
170.0	-0.4571	3.2155	2.1210	350.0	-0.4571	3.2153	2.1211
175.0	-0.5709	3.6728	1.1976	355.0	-0.5709	3.6728	1.1979

Item 17

L O C A T I O N S O F P R O B A B L E D E L A M I N A T I O N

RESULTS FOR PLY NO. 1 ORIENTATION 0.0 MATERIAL AS--IMLS AS--IMLS

CRITERION	RANGE	VALUE	LOCATION *
MAX OF K1XX*(NUCRT-NULRT)	0.0-- 90.0	0.588	75.0
MAX OF K1YY*(NUCRT-NULRT)	0.0-- 90.0	0.822	0.0
MAX OF K1XY*(NUCRT-NULRT)	0.0-- 90.0	1.411	60.0
MAX OF K1XX*(NUCRT-NULRT)	90.0-- 180.0	0.588	105.0
MAX OF K1YY*(NUCRT-NULRT)	90.0-- 180.0	0.822	180.0
MAX OF K1XY*(NUCRT-NULRT)	90.0-- 180.0	1.411	120.0
MAX OF K1XX*(NUCRT-NULRT)	180.0-- 270.0	0.588	255.0
MAX OF K1YY*(NUCRT-NULRT)	180.0-- 270.0	0.822	180.0
MAX OF K1XY*(NUCRT-NULRT)	180.0-- 270.0	1.411	240.0
MAX OF K1XX*(NUCRT-NULRT)	270.0-- 0.0	0.588	285.0
MAX OF K1YY*(NUCRT-NULRT)	270.0-- 0.0	0.822	0.0
MAX OF K1XY*(NUCRT-NULRT)	270.0-- 0.0	1.411	300.0

RESULTS FOR PLY NO. 2 ORIENTATION 90.0 MATERIAL SGLAHMHS AS--IMHS

CRITERION	RANGE	VALUE	LOCATION *
MAX OF K1XX*(NUCRT-NULRT)	0.0-- 90.0	1.407	90.0
MAX OF K1YY*(NUCRT-NULRT)	0.0-- 90.0	1.087	15.0
MAX OF K1XY*(NUCRT-NULRT)	0.0-- 90.0	1.476	25.0
MAX OF K1XX*(NUCRT-NULRT)	90.0-- 180.0	1.407	90.0
MAX OF K1YY*(NUCRT-NULRT)	90.0-- 180.0	1.087	165.0
MAX OF K1XY*(NUCRT-NULRT)	90.0-- 180.0	1.476	155.0
MAX OF K1XX*(NUCRT-NULRT)	180.0-- 270.0	1.407	270.0
MAX OF K1YY*(NUCRT-NULRT)	180.0-- 270.0	1.087	195.0
MAX OF K1XY*(NUCRT-NULRT)	180.0-- 270.0	1.476	205.0
MAX OF K1XX*(NUCRT-NULRT)	270.0-- 0.0	1.407	270.0
MAX OF K1YY*(NUCRT-NULRT)	270.0-- 0.0	1.087	345.0
MAX OF K1XY*(NUCRT-NULRT)	270.0-- 0.0	1.476	335.0

RESULTS FOR PLY NO. 3 ORIENTATION 90.0 MATERIAL SGLAHMHS AS--IMHS

CRITERION	RANGE	VALUE	LOCATION *
MAX OF K1XX*(NUCRT-NULRT)	0.0-- 90.0	1.407	90.0
MAX OF K1YY*(NUCRT-NULRT)	0.0-- 90.0	1.087	15.0
MAX OF K1XY*(NUCRT-NULRT)	0.0-- 90.0	1.476	25.0
MAX OF K1XX*(NUCRT-NULRT)	90.0-- 180.0	1.407	90.0
MAX OF K1YY*(NUCRT-NULRT)	90.0-- 180.0	1.087	165.0
MAX OF K1XY*(NUCRT-NULRT)	90.0-- 180.0	1.476	155.0
MAX OF K1XX*(NUCRT-NULRT)	180.0-- 270.0	1.407	270.0
MAX OF K1YY*(NUCRT-NULRT)	180.0-- 270.0	1.087	195.0
MAX OF K1XY*(NUCRT-NULRT)	180.0-- 270.0	1.476	205.0
MAX OF K1XX*(NUCRT-NULRT)	270.0-- 0.0	1.407	270.0
MAX OF K1YY*(NUCRT-NULRT)	270.0-- 0.0	1.087	345.0
MAX OF K1XY*(NUCRT-NULRT)	270.0-- 0.0	1.476	335.0

RESULTS FOR PLY NO. 4 ORIENTATION 0.0 MATERIAL AS--IMLS AS--IMLS

CRITERION	RANGE	VALUE	LOCATION *
MAX OF K1XX*(NUCRT-NULRT)	0.0-- 90.0	0.588	75.0
MAX OF K1YY*(NUCRT-NULRT)	0.0-- 90.0	0.822	0.0
MAX OF K1XY*(NUCRT-NULRT)	0.0-- 90.0	1.411	60.0
MAX OF K1XX*(NUCRT-NULRT)	90.0-- 180.0	0.588	105.0
MAX OF K1YY*(NUCRT-NULRT)	90.0-- 180.0	0.822	180.0
MAX OF K1XY*(NUCRT-NULRT)	90.0-- 180.0	1.411	120.0
MAX OF K1XX*(NUCRT-NULRT)	180.0-- 270.0	0.588	255.0
MAX OF K1YY*(NUCRT-NULRT)	180.0-- 270.0	0.822	180.0
MAX OF K1XY*(NUCRT-NULRT)	180.0-- 270.0	1.411	240.0
MAX OF K1XX*(NUCRT-NULRT)	270.0-- 0.0	0.588	285.0
MAX OF K1YY*(NUCRT-NULRT)	270.0-- 0.0	0.822	0.0
MAX OF K1XY*(NUCRT-NULRT)	270.0-- 0.0	1.411	300.0

NOTES: K1XX --> STRESS CONCENTRATION FACTOR DUE TO SIGMA XX
K1YY --> STRESS CONCENTRATION FACTOR DUE TO SIGMA YY
K1XY --> STRESS CONCENTRATION FACTOR DUE TO SIGMA XY
NULRT --> PLY POISSON RATIO IN R AND T AXES
NUCRT --> COMPOSITE POISSON RATIO IN R AND T AXES
(R AND T ARE THE RADIAL AND THE TANGENTIAL DIRECTIONS)
ONLY 5 DEG. INTERVALS ARE CONSIDERED. THE ACTUAL VALUE
IS EXPECTED TO BE WITHIN 5 DEG. OF THE PRINTED RESULT.

Item 18

P L Y S T R E S S A N D S T R A I N I N F L U E N C E C O E F F I C I E N T S A R R A Y S

PLY NO.	MATERIAL SYSTEM	THETA	RESPONSE	NX (UNIT LOAD ...	NY	NXY LB./INCH)	MX (UNIT MOMENT...LB.IN/INCH)	MY	MXY	DELTAT (1 DEG F)	DELTAM (1 %)
1	AS--/IMLS	0.0									
			EPS11	2.7511	-0.2236	0.0000	266.0017	-59.2159	0.0000	1.1801	105.0192
			EPS22	-0.2236	7.2490	-0.0000	-59.2160	2938.3235	-0.0024	5.8164	342.4932
			EPS12	0.0000	-0.0000	54.0802	0.0000	-0.0024	8011.9414	-0.0000	-0.0023
			SIG11	47.6932	-1.4628	0.0000	4598.8906	-47.6819	-0.0001	11.7478	588.3518
			SIG22	0.6647	8.1391	-0.0001	21.6664	3309.6074	-0.0027	-20.9790	-1238.7244
			SIG12	0.0000	-0.0000	29.5831	0.0000	-0.0013	4382.7227	-0.0000	-0.0012
2	SGLA/HMHS AS--/IMHS	90.0									
			EPS11	-0.2236	7.2490	0.0000	-14.8040	734.5815	0.0019	5.8164	342.4929
			EPS22	2.7511	-0.2236	-0.0001	66.5005	-14.8040	-0.0025	1.1801	105.0192
			EPS12	-0.0000	0.0001	-54.0802	-0.0002	0.0025	-2002.9873	0.0001	0.0029
			SIG11	-1.3294	83.7219	0.0002	-140.8320	8487.6133	0.0213	41.9581	2477.4478
			SIG22	4.6136	2.9257	-0.0001	107.2302	309.9329	-0.0034	-23.4957	-1176.7065
			SIG12	-0.0000	0.0001	-40.8337	-0.0002	0.0019	-1512.3735	0.0000	0.0022
3	SGLA/HMHS AS--/IMHS	90.0									
			EPS11	-0.2236	7.2490	0.0000	14.8040	-734.5796	-0.0019	5.8164	342.4927
			EPS22	2.7511	-0.2236	-0.0001	-66.5004	14.8040	0.0025	1.1801	105.0192
			EPS12	-0.0000	0.0001	-54.0802	0.0002	-0.0025	2002.9846	0.0001	0.0029
			SIG11	-1.3294	83.7219	0.0002	140.8316	-8487.5898	-0.0213	41.9580	2477.4451
			SIG22	4.6136	2.9257	-0.0001	-107.2300	-309.9319	0.0034	-23.4957	-1176.7065
			SIG12	-0.0000	0.0001	-40.8337	0.0002	-0.0019	1512.3713	0.0000	0.0022
4	AS--/IMLS	0.0									
			EPS11	2.7511	-0.2236	0.0000	-266.0017	59.2159	-0.0000	1.1801	105.0192
			EPS22	-0.2236	7.2490	-0.0000	59.2159	-2938.3228	0.0024	5.8164	342.4924
			EPS12	0.0000	-0.0000	54.0802	-0.0000	0.0024	-8011.9414	-0.0000	-0.0023
			SIG11	47.6932	-1.4628	0.0000	-4598.8906	47.6819	0.0001	11.7478	588.3518
			SIG22	0.6647	8.1391	-0.0001	-21.6664	-3309.6067	0.0027	-20.9790	-1238.7251
			SIG12	0.0000	-0.0000	29.5831	-0.0000	0.0013	-4382.7227	-0.0000	-0.0012

NOTE: STRAINS ARE IN MICRO INCH/INCH.
STRESSES ARE IN POUNDS/INCH SQ.

EXPLANATION OF THE INFLUENCE COEFFICIENTS

NX,NY AND NXY ARE UNIT LOADS IN LB/INCH. MX,MY AND MXY ARE UNIT MOMENTS IN LB.IN/INCH. DELTAT IS A UNIT TEMP. DIFF. AND DELTAM IS A UNIT PERCENTAGE OF MOISTURE CONTENT. TO OBTAIN RESPONSE R FOR A GENERAL APPLIED LOAD VECTOR F USE THE FOLLOWING EQUATION:

(R) = (AINF) X (F)

NOTE: R IS A 6X1 COLUMN VECTOR DEFINED BY

$$(R) = (EPS11\ EPS22\ EPS12\ SIG11\ SIG12\ SIG12)^T$$

F IS A 8X1 COLUMN VECTOR DEFINED BY

$$(F) = (NX\ NY\ NXY\ MX\ MY\ MXY\ DELTAT\ DELTAM)^T$$

AINF IS A (6X8) MATRIX CONTAINING THE INFLUENCE COEFFICIENTS ARRAYS.

P L Y S T R E S S I N F L U E N C E C O E F F I C I E N T S A R R A Y S

PLY NO.	MATERIAL SYSTEM	THETA	RESPONSE	NX (UNIT LOAD ... SCALE FACTOR = (1/TC)	NY	NXY LB./INCH) 33.333	MX (UNIT MOMENT...LB.IN/INCH) SCALE FACTOR = 6666.668 (6/TC**2)	MY	MXY	DELTAT (1 DEG F) 13.354	DELTAM (1 %) 1223.138
1	AS--/IMLS	0.0									
			SIG11	1.4308	-0.0439	0.0000	0.6898	-0.0072	-0.0000	0.8797	0.4810
			SIG22	0.0199	0.2442	-0.0000	0.0032	0.4964	-0.0000	-1.5709	-1.0127
			SIG12	0.0000	-0.0000	0.8875	0.0000	-0.0000	0.6574	-0.0000	-0.0000
2	SGLA/HMHS AS--/IMHS	90.0									
			SIG11	-0.0399	2.5117	0.0000	-0.0211	1.2731	0.0000	3.1419	2.0255
			SIG22	0.1384	0.0878	-0.0000	0.0161	0.0465	-0.0000	-1.7594	-0.9620
			SIG12	-0.0000	0.0000	-1.2250	-0.0000	0.0000	-0.2269	0.0000	0.0000
3	SGLA/HMHS AS--/IMHS	90.0									
			SIG11	-0.0399	2.5117	0.0000	0.0211	-1.2731	-0.0000	3.1419	2.0255
			SIG22	0.1384	0.0878	-0.0000	-0.0161	-0.0465	0.0000	-1.7594	-0.9620
			SIG12	-0.0000	0.0000	-1.2250	0.0000	-0.0000	0.2269	0.0000	0.0000
4	AS--/IMLS	0.0									
			SIG11	1.4308	-0.0439	0.0000	-0.6898	0.0072	0.0000	0.8797	0.4810
			SIG22	0.0199	0.2442	-0.0000	-0.0032	-0.4964	0.0000	-1.5709	-1.0127
			SIG12	0.0000	-0.0000	0.8875	-0.0000	0.0000	-0.6574	-0.0000	-0.0000

NOTE: THE MEMBRANE STRESSES ARE NORMALIZED W.R.T THE AVERAGE STRESS DUE TO UNIT LOAD IN AN EQUIVALENT HOMOGENEOUS SECTION. THE BENDING STRESSES ARE NORMALIZED W.R.T THE MAXIMUM STRESS DUE TO UNIT MOMENT. THE TEMPERATURE AND MOISTURE STRESSES ARE NORMALIZED W.R.T THE AVERAGE STRESSES DUE TO UNIT TEMPERATURE DIFFERENCE AND UNIT PERCENTAGE OF MOISTURE. TO OBTAIN THE ABSOLUTE VALUES OF THE STRESSES THE INFLUENCE COEFFICIENTS SHOULD BE MULTIPLIED BY THE INDICATED SCALE FACTORS. THESE SHOULD BE MULTIPLIED BY THE CORRESPONDING LOADS TO OBTAIN STRESSES IN THE PLIES.

Item 19

L A M I N A T E F A I L U R E S T R E S S A N A L Y S I S

LAYUP --> 0 90 90 0

LAMINATE FAILURE STRESSES BASED UPON FIRST PLY FAILURE CRITERIA (NO TEMPERATURE OR MOISTURE STRESSES)

PLY NO. = 1 THETA = 0.00 MATERIAL SYSTEM = AS--IMLS AS--IMLS

LOADS	SL11T 222.7741 KSI	SL11C 87.6392 KSI	SL22T 5.0065 KSI	SL22C 15.0194 KSI	SL12S 5.1261 KSI	FAIL. LOAD KSI	MODE
SCXXT MIN (	155.699	-61.252	251.063	-753.188	0.000)	155.699	SL11T
SCXXC MIN (	-155.699	61.252	-251.063	753.188	0.000)	61.252	SL11C
SCYYT MIN (	-5076.305	1997.015	20.504	-61.511	0.000)	20.504	SL22T
SCYYC MIN (	5076.305	-1997.015	-20.504	61.511	0.000)	61.511	SL22C
SCXYS MIN (	0.000	0.000	**********	**********	5.776)	5.776	SL12S

LAMINATE FAILURE STRESSES BASED UPON FIRST PLY FAILURE CRITERIA (NO TEMPERATURE OR MOISTURE STRESSES)

PLY NO. = 2 THETA = 90.00 MATERIAL SYSTEM = SGLAHMHS AS--IMHS

LOADS	SL11T 216.8321 KSI	SL11C 166.5112 KSI	SL22T 9.9151 KSI	SL22C 23.1353 KSI	SL12S 11.9513 KSI	FAIL. LOAD KSI	MODE
SCXXT MIN (	-5436.801	4175.063	71.638	-167.155	0.000)	71.638	SL22T
SCXXC MIN (	5436.801	-4175.063	-71.638	167.155	0.000)	167.155	SL22C
SCYYT MIN (	86.330	-66.295	112.967	-263.589	**********)	86.330	SL11T
SCYYC MIN (	-86.330	66.295	-112.967	263.589	**********)	66.295	SL11C
SCXYS MIN (	**********	**********	**********	**********	9.756)	9.756	SL12S

LAMINATE FAILURE STRESSES BASED UPON FIRST PLY FAILURE CRITERIA (NO TEMPERATURE OR MOISTURE STRESSES)

PLY NO. = 3 THETA = 90.00 MATERIAL SYSTEM = SGLAHMHS AS--IMHS

LOADS	SL11T 216.8321 KSI	SL11C 166.5112 KSI	SL22T 9.9151 KSI	SL22C 23.1353 KSI	SL12S 11.9513 KSI	FAIL. LOAD KSI	MODE
SCXXT MIN (	-5436.801	4175.063	71.638	-167.155	0.000)	71.638	SL22T
SCXXC MIN (	5436.801	-4175.063	-71.638	167.155	0.000)	167.155	SL22C
SCYYT MIN (	86.330	-66.295	112.967	-263.589	**********)	86.330	SL11T
SCYYC MIN (	-86.330	66.295	-112.967	263.589	**********)	66.295	SL11C
SCXYS MIN (	**********	**********	**********	**********	9.756)	9.756	SL12S

NOTE: "**********" IMPLIES -"NOT APPLICABLE"-

LAYUP --> 0 90 90 0

LAMINATE FAILURE STRESSES BASED UPON FIRST PLY FAILURE CRITERIA (NO TEMPERATURE OR MOISTURE STRESSES)

PLY NO. = 4 THETA = 0.00 MATERIAL SYSTEM = AS--IMLS AS--IMLS

LOADS	SL11T 222.7741 KSI	SL11C 87.6392 KSI	SL22T 5.0065 KSI	SL22C 15.0194 KSI	SL12S 5.1261 KSI	FAIL. LOAD KSI	MODE
SCXXT MIN (	155.699	-61.252	251.062	-753.187	0.000)	155.699	SL11T
SCXXC MIN (	-155.699	61.252	-251.062	753.187	0.000)	61.252	SL11C
SCYYT MIN (	-5076.309	1997.017	20.504	-61.511	0.000)	20.504	SL22T
SCYYC MIN (	5076.309	-1997.017	-20.504	61.511	0.000)	61.511	SL22C
SCXYS MIN (	0.000	0.000	**********	**********	5.776)	5.776	SL12S

Item 20

S U M M A R Y

LAMINATE FAILURE STRESS ANALYSIS - (NO TEMPERATURE OR MOISTURE STRESSES)
(BASED UPON FIRST PLY FAILURE)

LOAD TYPE	STRESS KSI	FAILURE MODE	PLY NO.	THETA	MATERIAL SYSTEM	
SCXXT	71.638	SL22T	3	90.0	SGLAHMHS	AS--IMHS
SCXXC	61.252	SL11C	4	0.0	AS--IMLS	AS--IMLS
SCYYT	20.504	SL22T	1	0.0	AS--IMLS	AS--IMLS
SCYYC	61.511	SL22C	1	0.0	AS--IMLS	AS--IMLS
SCXYS	5.776	SL12S	4	0.0	AS--IMLS	AS--IMLS

LAMINATE FAILURE STRESS ANALYSIS - (NO TEMPERATURE OR MOISTURE STRESSES)
(BASED UPON FIBER FAILURE)

LOAD TYPE	STRESS KSI	FAILURE MODE	PLY NO.	THETA	MATERIAL SYSTEM	
SCXXT	155.699	SL11T	4	0.0	AS--IMLS	AS--IMLS
SCXXC	61.252	SL11C	4	0.0	AS--IMLS	AS--IMLS
SCYYT	86.330	SL11T	2	90.0	SGLAHMHS	AS--IMHS
SCYYC	66.295	SL11C	2	90.0	SGLAHMHS	AS--IMHS
SCXYS	*********	N/A				

NOTE: IF THERE IS NO ANGLE PLY "SCXYS" BASED UPON FIBRE FAILURE IS NOT PREDICTED.

Appendix C
Resident Data Bank (FBMTDATA.BANK)

```
T300
FP   3000 0.300E-03 0.640E-01
FE  0.320E 08 0.200E 07 0.200E 00 0.250E 00 0.130E 07 0.700E 06
FT -0.550E-06 0.560E-05 0.580E 03 0.580E 02 0.170E 00
FS  0.350E 06 0.300E 06     0.000     0.000     0.000     0.000

AS--
FP  10000 0.300E-03 0.630E-01
FE  0.310E 08 0.200E 07 0.200E 00 0.250E 00 0.200E 07 0.100E 07
FT -0.550E-06 0.560E-05 0.580E 03 0.580E 02 0.170E 00
FS  0.400E 06 0.400E 06     0.000     0.000     0.000     0.000

SGLA
FP    204 0.360E-03 0.900E-01
FE  0.124E 08 0.124E 08 0.200E 00 0.200E 00 0.517E 07 0.517E 07
FT  0.280E-05 0.280E-05 0.750E 01 0.750E 01 0.170E 00
FS  0.360E 06 0.300E 06 0.360E 06 0.300E 06 0.180E 06 0.180E 06

HMSF  HIGH MODULUS SURFACE TREATED FIBER.
FP  10000 0.300E-03 0.703E-01
FE  0.550E 08 0.900E 06 0.200E 00 0.250E 00 0.110E 07 0.700E 06
FT -0.550E-06 0.560E-05 0.580E 03 0.580E 02 0.170E 00
FS  0.280E 06 0.200E 06     0.000     0.000     0.000     0.000
OVER   END OF FIBER PROPERTIES.

IMLS  INTERMEDIATE MODULUS LOW STRENGTH MATRIX.
MP  0.460E-01
ME  0.500E 06 0.410E 00 0.570E-04
MT  0.125E 01 0.250E 00
MS  0.700E 04 0.210E 05 0.700E 04 0.140E-01 0.420E-01 0.320E-01 0.320E-01
MV  0.225E 00 0.420E 03
IMHS  INTERMEDIATE MODULUS HIGH STRENGTH MATRIX.
MP  0.440E-01
ME  0.500E 06 0.350E 00 0.360E-04
MT  0.125E 01 0.250E 00
MS  0.150E 05 0.350E 05 0.130E 05 0.200E-01 0.500E-01 0.350E-01 0.350E-01
MV  0.225E 00 0.420E 03
HMHS  HIGH MODULUS HIGH STRENGTH MATRIX.
MP  0.450E-01
ME  0.750E 06 0.350E 00 0.400E-04
MT  0.125E 01 0.250E 00
MS  0.200E 05 0.500E 05 0.150E 05 0.200E-01 0.500E-01 0.400E-01 0.400E-01
MV  0.225E 00 0.420E 03
OVER   END OF MATRIX PROPERTIES.
```

References

1. Chamis, Christos C.: Design Oriented Analysis and Synthesis of Multilayered-Filamentary Structural Panels. Ph.D. Thesis, Case Western Reserve Univ., 1967.
2. Chamis, Christos C.: Thermoelastic Properties of Unidirectional Filamentary Composites by a Semiempirical Micromechanics Theory. Advanced Techniques for Material Investigation and Fabrication. Science of Advanced Materials and Process Engineering Proceedings. Vol. 14. Western Periodicals Co., 1968, paper 1-4-5.
3. Chamis, Christos C.: Characterization and Design Mechanics for Fiber-Reinforced Metals. NASA TN-D-5784, 1970.
4. Chamis, Christos C.: Failure Criteria for Filamentary Composites: NASA TN-D-5367, 1969.
5. Chamis, Christos C.: Buckling of Anisotropic Composite Plates. J. Struct. Div., Am. Soc. Civ. Eng., vol. 95, no. ST10, Oct. 1969, pp. 2119-2139.
6. Chamis, Christos C.: Design and Analysis of Fiber Composite Structural Components. Aerospace Structural Materials. NASA SP-227, 1970, pp. 217-228.
7. Foye, R.L.: Compression Strength of Unidirectional Composites. AIAA Paper 66-143, Jan. 1966.
8. Ozisik, M.N.: Boundary Value Problems of Heat Conduction. International Textbook Co., 1968.
9. Hoffman, Oscar: The Brittle Strength of Orthotropic Materials. J. Compos. Mater., vol. 1, no. 2, Apr. 1967, pp. 200-206.
10. Chamis, C.C.: Important Factors in Fiber Composite Design. Proceedings, Society of the Plastics Industry, Annual Technical Conference, 24th, 1969, pp. 18-E-1 to 18-E-13.
11. Chamis, C.C.: Computer Code for the Analysis of Multilayered Fiber Composites – User's Manual. NASA TN-D-7013, 1971.
12. Chamis, C.C., and Sinclair, J.H.: Prediction of Properties of Intraply Hybrid Composites. NASA TM-79087, 1979.
13. Chamis, C.C., and Sinclair, J.H.: Micromechanics of Intraply Hybrid Composites: Elastic and Thermal Properties. NASA TM-79253, 1979.
14. Chamis, C.C., Lark, R.F., and Sinclair, J.H.: Mechanical Property Characterization of Intraply Hybrid Composites. NASA TM-79306, 1979.
15. Chamis, C.C., Lark, R.F., and Sinclair, J.H.: An Integrated Theory for Predicting the Hydrothermomechanical Response of Advanced Composite Structural Components. NASA TM-73812, 1977.
16. Chamis, C.C., and Sinclair, J.H.: Computer Code for Intraply Hybrid Composite Design. NASA TM-82593, 1981.
17. Chamis, C.C., and Sinclair, J.H.: INHYD: Computer Code for Intraply Hybrid Composite Design. NASA TP-2239, 1983.
18. Pagano, N.J., Pipes, R.B.: Some Observations on the Interlaminar Strength of Composite Laminates. Int. J. Mech. Sci., vol. 15, no. 8, 1973 pp. 679-688.
19. Lekhnitskii, S.G. (P. Fern, Transl.): Theory of Elasticity of an Anisotropic Elastic Body. Holden-Day, 1963.

1. Report No.	2. Government Accession No.	3. Recipient's Catalog No.
NASA TP-2515		

4. Title and Subtitle	5. Report Date
Integrated Composite Analyzer (ICAN) - Users and Programmers Manual	March 1986
	6. Performing Organization Code: 505-33-7A
7. Author(s): Pappu L. N. Murthy and Christos C. Chamis	8. Performing Organization Report No.: E-2035
	10. Work Unit No.
9. Performing Organization Name and Address: National Aeronautics and Space Administration, Lewis Research Center, Cleveland, Ohio 44135	11. Contract or Grant No.
	13. Type of Report and Period Covered: Technical Paper
12. Sponsoring Agency Name and Address: National Aeronautics and Space Administration, Washington, D.C. 20546	14. Sponsoring Agency Code

15. Supplementary Notes

Pappu L.N. Murthy, National Research Council - NASA Research Associate; Christos C. Chamis, Lewis Research Center

16. Abstract

This manual describes the use of and relevant equations programmed in a computer code designed to carry out a comprehensive linear analysis of multilayered fiber composites. The analysis contains the essential features required to effectively design structural components made from fiber composites. The program is an outgrowth of two in-house computer codes, MFCA (Multilayered Filamentary Composite Analysis) and INHYD (Intraply Hybrid Composite Design). The inputs to the code are constituent material properties, factors reflecting the fabrication process, and composite geometry. The code performs micromechanics, macromechanics, and laminate analysis, including the hygrothermal response of fiber composites. The code outputs are the various ply and composite properties, composite structural response, and composite stress analysis results with details on failure. The code is in Fortran IV and can be used efficiently as a package in complex structural analysis programs. The input-output format is described extensively through the use of a sample problem. The program listing is also included. The code manual consists of two parts. The mechanics for using the code are described in the first part, the pertinent equations programmed in the code are described in the second part.

17. Key Words (Suggested by Author(s))	18. Distribution Statement
Composite mechanics, Hygrothermomechanical response, Delamination, Failure criteria, Environmental effects, Data base, Mechanical properties, Thermal properties, Hygral properties	Unclassified - unlimited STAR Category 24

19. Security Classif. (of this report)	20. Security Classif. (of this page)	21. No. of pages	22. Price
Unclassified	Unclassified	75	A04

For sale by the National Technical Information Service, Springfield, Virginia 22161

NASA-Langley, 1986